YAMAHA

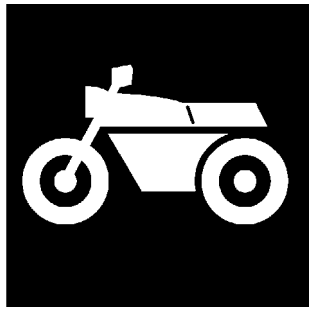

CATALOGO DE REPUESTOS

YZF-R6 (2C01) SPAIN

1E2C0-352S1

(2E2C0-352S1)

YAMAHA GENUINE Parts & Accessories

2008/2/22

NEWS No.	DATE	COMMENT
PE0-MC-060050	May.,22,2006	FIG.5:WATER PUMP LIST&ILLUSTRATION REVISION
PE0-MC-070101	Dec.,27,2007	FIG.36:REAR MASTER CYLINDER LIST&ILLUSTRATION REVISION

A2

YZF-R6
CATALOGO DE REPUESTOS
©2005 por Yamaha Motor Co., Ltd.
1ª edición, octubre 2005
Todos los derechos reservados.
Toda reproducción o uso no autorizado
sin el consentimiento escrito de
Yamaha Motor Co., Ltd.
quedan expresamente prohibidos

A3

YZF-R6

A4

PROLOGO

Este catálogo de repuestos corresponde a las piezas para el o los modelos que figuran en la página de portada. Al formular el pedido de repuestos, se ruega citar este catálogo y especificar correctamente el número y el nombre de las piezas.

1. Las modificaciones y agregados que se hayan realizado después de la edición de este Catálogo de Repuestos, serán anunciados en las Informaciones de Recambios.
   Es recomendable que se hagan las correcciones necesarias en el Catálogo de Repuestos de acuerdo con las Informaciones de Recambios.

2. Abreviaciones
   En este. Catálogo de Repuestos se emplean las siguientes abreviaciones.

   "UR" Usar el número de partes especificado
   "UN" Usar la cantidad necesaria
   "AP" Piezas sustitutivas
   "LM" Fabricación local (Hay que pedir los repuestos en las cercanías)
   "F#" Nº de bastidor (Nº aplicable a la máquina)
   "O/S" Sobredimensionado

3. La cantidad de componentes para el montaje
   - Los componentes, suministrados como conjunto, se describen con un punto (.) que precede al nombre del parte como se indica a continuación.
   - La numeración que aparece a la derecha de cada descripción indica la cantidad de partes por cada unidad de conjunto.

CODIGO Nº	DESCRIPCION	CANT.	OBSERVACIONES
2F5–83310–60	ENSAMBLAJE DE LA LUZ	2	
115–83311–60	.BOMBILLA (6V–18W)	1	

4. Los colores de los componentes se indican como sigue en la columna de "OBSERVACIONES".

CODIGO Nº	DESCRIPCION	CANT.	OBSERVACIONES
2N4–24110–00–X5	COMP. DEL TANQUE	2	MXR
3J1–24240–10	.GRAFICO, DEL TANQUE	1	PARA MXR

5. Debe tenerse en cuenta que las ilustraciones sirven como guia para la búsqueda de los números de partes y no deben usarse para el montaje. Durante el montaje, se recomienda usar el manual de taller correspondiente.

6. EL asterisco (*) antes del número de referencia indica los elementos modificados después de la primera edición.

7. Números de serie

Nº de Serie del motor

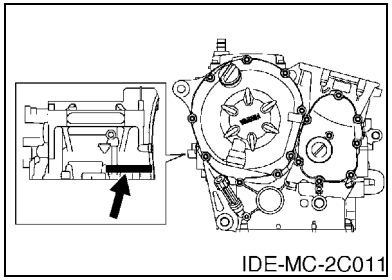

Nº de Serie del bastidor

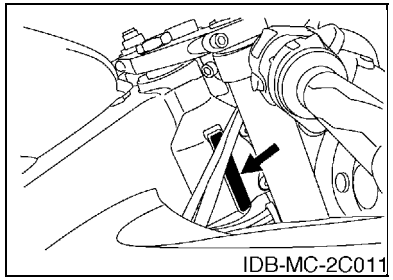

8. Códigos de color aplicables (El símbolo (*) muestra el color de modelo.)

Abreviatura	Nombre de color	Código de color
BWC1(*)	BLUISH WHITE COCKTAIL 1	0390
DPBMC(*)	DEEP PURPLISH BLUE METALLIC C	0564
LGB	LOW GLOSS BLACK	0098
MBL2	MAT BLACK 2	0582
SMX(*)	BLACK METALLIC X	0903
VRC1	VIVID RED COCKTAIL 1	0121

ROTULO DE MODELO

(1) El rótulo llamada “Rótulo de Modelo” está en la ubicación indicada abajo en el (3). Cuando se utilice este catálogo de repuestos, se ruega cotejar entre el “código de modelo–número de código de producción” del catálogo y el “código de modelo–número de código de producción” indicado en el Rótulo de Modelo fijado en el producto correspondiente.

(2) Indicación del “Rótulo de Modelo”

a	b
○ xxxx – xxx	
● x c	

a: Código de tipo de Modelo

b: Número de código de Producción

c: Tipo de color

○ 4TW1–010
● A

(3) Ubicación de fijación del Rótulo de Modelo

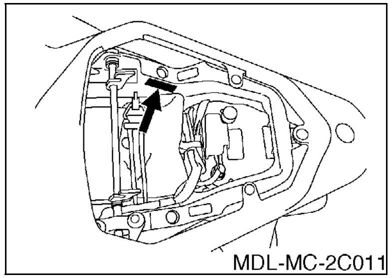

(4) Información de Color

Código de Modelo	Código de tipo de color	Código de color	Nombre de color	Abreviatura
2C01	A	0564	DEEP PURPLISH BLUE METALLIC C	DPBMC
	B	0390	BLUISH WHITE COCKTAIL 1	BWC1
	C	0903	BLACK METALLIC X	SMX

(5) Código de Modelo–Número de código de Producción del Modelo Listado en este Catálogo de Repuestos

Código de Modelo	Número de Código de Producción	País (destino)
2C01	040	SPAIN

Código de Modelo	Número de Código de Producción	País (destino)

CONTENIDO

MOTOR

CILINDRO B2
CIGUENAL & PISTON B3
VALVULA B4
ARBOL DE LEVAS & CADENA B6
BOMBA DE AGUA B7
RADIADOR & MANGUERA B8
BOMBA DE ACEITE B11
FILTRO ACEITE B12
ADMISION B13
ADMISION 2 ..... B15
SYSTEMA DE INDUCCION DE AIRE C2
DESCARGA C3
CARTER C5
CUBIERTA DE CARTER 1 ..... C7
ARRANQUE C8
EMBRAGUE C9
TRANSMISION C11
LEVA DE CAMBIO & HORQUILLA C13
EJE DE CAMBIO & PEDAL C14

SHASIS

CUADRO D2
GUARDABARRO D4
CUBIERTA LATERAL D7
BRAZO TRASERO D8
SUSPENSION TRASERO D10
DIRECCION D11
HORQUILLA DELANTERA D12
DEPOSITO DE COMBUSTIBLE D14
ASIENTO E3
RUEDA DELANTERA E4
CALIBRE FRENO DELANTERA E5
RUEDA TRASERA E6
CALIBRE FRENO TRASERA E8
MANILLAR & CABLE E9
CILINDRO MAESTRO DELANTERO E10
SOPORTE & APOYAPIE E12
CILINDRO MAESTRO TRASERO E15
BOVEDA 1 ..... F3
BOVEDA 2 ..... F6
GENERADOR F10
MOTOR DE ARRANQUE F11
LUZ DE DESTELLADOR F12
MEDIDOR F13
FARO DELANTERO F14
LUZ DE COLA F15
INTERRUPTOR DE MANILLAR&PALANC G2
EQUIPO ELECTRICO 1 ..... G3
EQUIPO ELECTRICO 2 ..... G4

INDICE

INDICE NUMERICO M1

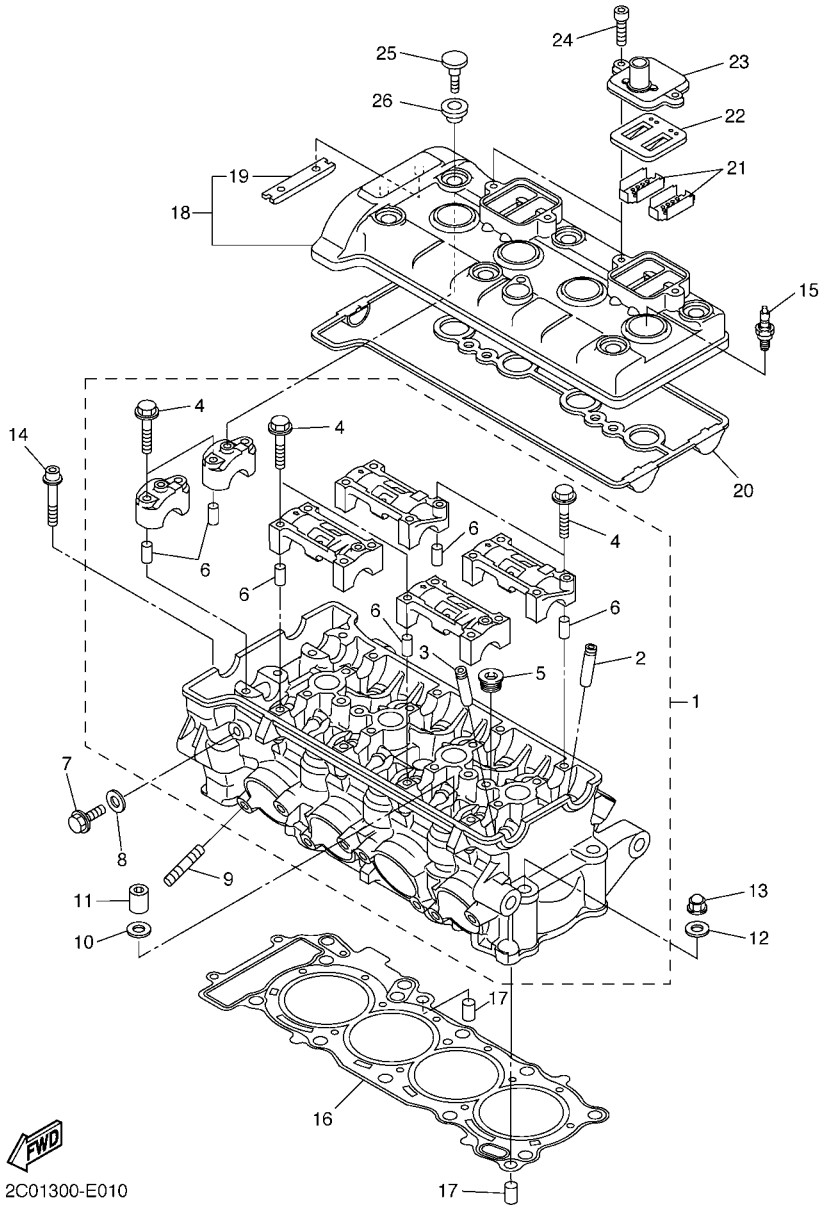

FIG. 1 CILINDRO

REF. Nº	CODIGO Nº	DESCRIPCION	2C01					OBSERVACIONES
1	2C0–11101–00	CULATA DE CILINDRO COMPLETA	1					
2	2C0–11133–10	.GUIA DE VALVULA 1	8					
3	2C0–11134–10	.GUIA DE VALVULA 2	8					
4	90105–06027	.TORNILLO	20					
5	90340–18002	.TORNILLO, DE DRENAJE	3					
6	91808–16023	.PASADOR DE CLAVIJA	12					
7	95022–08012	PERNO, DE BRIDA	1					
8	90430–08119	JUNTA	1					
9	95612–08625	TUERCA U	8					
10	90201–10013	ARANDELA PLANA	8					
11	90179–10006	TUERCA	8					
12	90201–10013	ARANDELA PLANA	2					
13	90176–10075	TUERCA CORONA	2					
14	90110–06094	TORNILLO ALLEN	2					
15	94701–00402	BUJIA (NGK CR10EK)	4					
16	2C0–11181–00	JUNTA, DE CULATA 1	1					
17	99530–10114	PASADOR, DE ESPIGA	2					
18	2C0–11191–00	TAPA CULATA DE CILINDRO 1	1					
19	5BE–12241–00	.TOPE DE GUIA 2	1					
20	2C0–11193–00	EMPAQUE	1					
21	5VY–1482K–00	PLACA	4					
22	5SL–14890–00	VALVULA DE LENGUETA COMPLETA	2					
23	5VY–14899–00	TAPA, DE CAJA	2					
24	90110–06175	TORNILLO ALLEN	4					
25	90109–066F0	PERNO	6					
26	5VY–1111G–00	CASQUILLO DE GOMA	6					

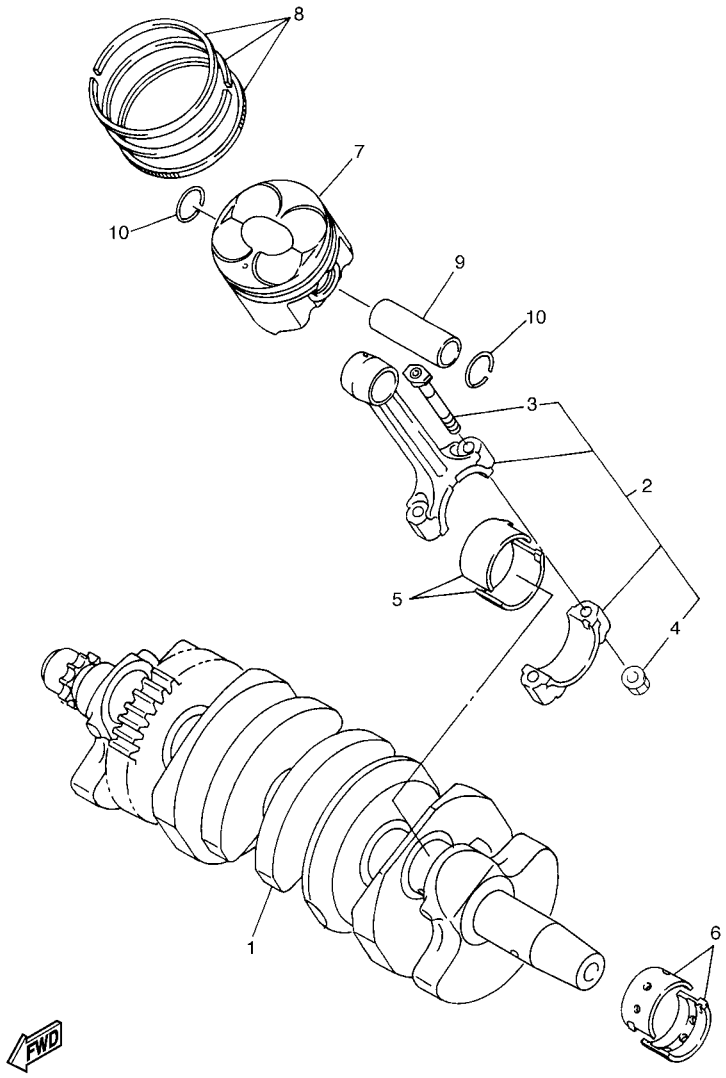

2C01300-E020

FIG. 2 CIGUENAL & PISTON

REF. Nº	CODIGO Nº	DESCRIPCION	2C01					OBSERVACIONES
1	2C0–11411–00	CIGUENAL	1					
2	2C0–11650–00	BIELA COMPLETA	4					
3	2C0–11654–00	.TORNILLO DE BIELA	2					
4	90179–07001	.TUERCA	2					
5	2C0–11656–00	COJINETE PLANO	8					UR AZUL
	2C0–11656–10	COJINETE PLANO	8					UR NEGRO
	2C0–11656–20	COJINETE PLANO	8					UR MARRON
	2C0–11656–30	COJINETE PLANO	8					UR VERDE
6	2C0–11416–00	COJINETE PLANO 1	10					UR AZUL
	2C0–11416–10	COJINETE PLANO 1	10					UR NEGRO
	2C0–11416–20	COJINETE PLANO 1	10					UR MARRON
	2C0–11416–30	COJINETE PLANO 1	10					UR VERDE
	2C0–11416–40	COJINETE PLANO 1	10					UR AMARILLO
7	2C0–11631–00	PISTON (NORMA)	4					
8	2C0–11603–00	JUEGO DE ANILLOS (NORMA)	4					
9	2C0–11633–00	PASADOR, PISTON	4					
10	93450–16153	SEGURO	8					

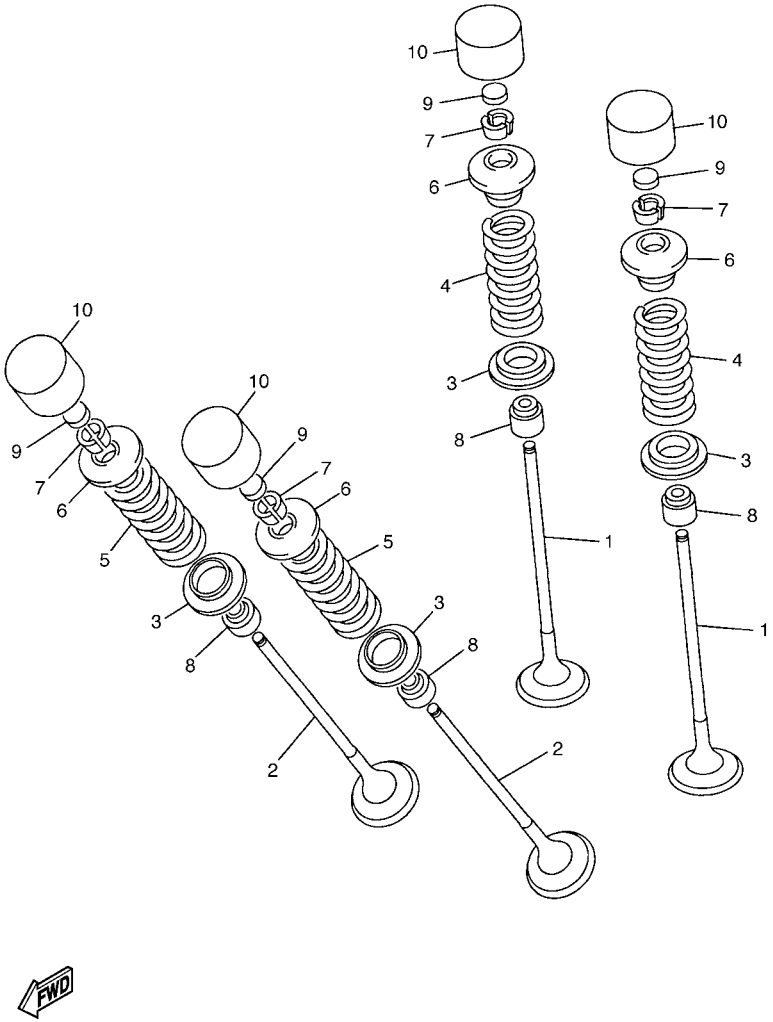

2C01300-E030

FIG. 3 VALVULA

REF. Nº	CODIGO Nº	DESCRIPCION	2C01					OBSERVACIONES
1	2C0–12111–00	VALVULA DE ADMISION	8					
2	2C0–12121–00	VALVULA DE ESCAPE	8					
3	2C0–12116–00	ASIENTO RESORTE DE VALVULA	16					
4	2C0–12113–00	RESORTE VALVULA INTERNA	8					
5	2C0–12114–00	RESORTE VALVULA EXTERIOR	8					
6	2C0–12117–00	RETEN RESORTE DE VALVULA	16					
7	1WG–12118–00	SEGURO DE VALVULA	32					
8	4SV–12119–00	SELLO DE ACEITE VALVULA	16					
9	1HX–12168–00	COJIN, AJUSTADOR 2 (1.20)	16					UR
	1HX–12168–20	COJIN, AJUSTADOR 2 (1.25)	16					UR
	1HX–12168–40	COJIN, AJUSTADOR 2 (1.30)	16					UR
	1HX–12168–60	COJIN, AJUSTADOR 2 (1.35)	16					UR
	1HX–12168–80	COJIN, AJUSTADOR 2 (1.40)	16					UR
	1HX–12168–A0	COJIN, AJUSTADOR 2 (1.45)	16					UR
	1HX–12168–F0	COJIN, AJUSTADOR 2 (1.50)	16					UR
	1HX–12168–H1	COJIN, AJUSTADOR 2 (1.55)	16					UR
	1HX–12168–K1	COJIN, AJUSTADOR 2 (1.60)	16					UR
	1HX–12168–M1	COJIN, AJUSTADOR 2 (1.65)	16					UR
	1HX–12168–R1	COJIN, AJUSTADOR 2 (1.70)	16					UR
	1HX–12168–U1	COJIN, AJUSTADOR 2 (1.75)	16					UR
	1HX–12168–W1	COJIN, AJUSTADOR 2 (1.80)	16					UR
	1HX–12168–Y1	COJIN, AJUSTADOR 2 (1.85)	16					UR
	1HX–12169–11	COJIN, AJUSTADOR 2 (1.90)	16					UR
	1HX–12169–31	COJIN, AJUSTADOR 2 (1.95)	16					UR
	1HX–12169–50	COJIN, AJUSTADOR 2 (2.00)	16					UR
	1HX–12169–70	COJIN, AJUSTADOR 2 (2.05)	16					UR
	1HX–12169–90	COJIN, AJUSTADOR 2 (2.10)	16					UR

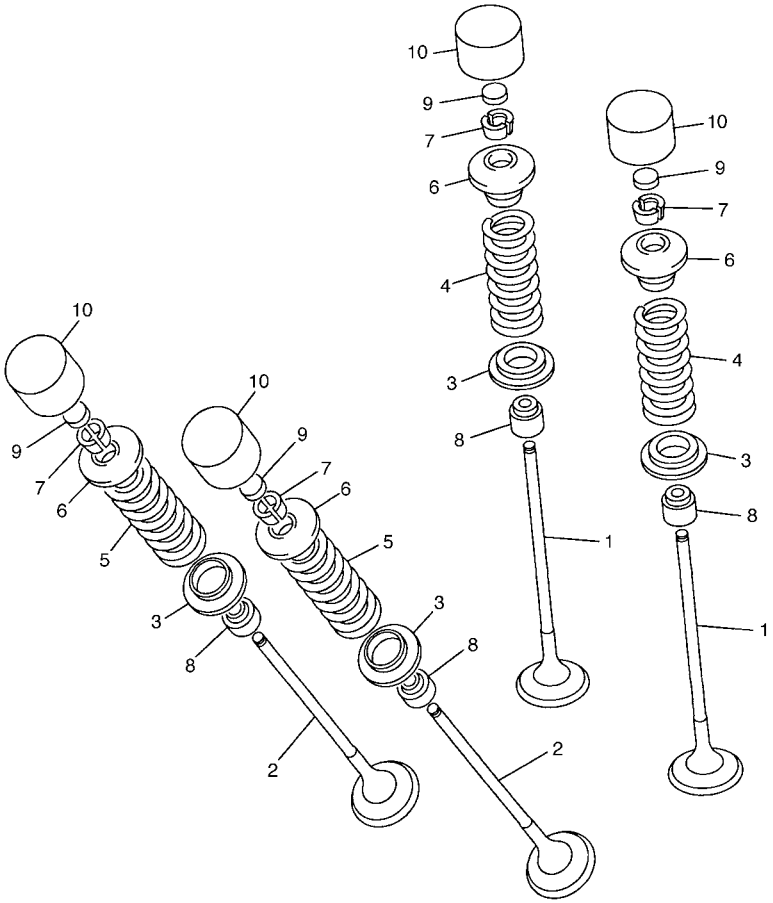

2C01300-E030

FIG. 3 VALVULA

REF. Nº	CODIGO Nº	DESCRIPCION	2C01					OBSERVACIONES
9	1HX–12169–E0	COJIN, AJUSTADOR 2 (2.15)	16					UR
	1HX–12169–G0	COJIN, AJUSTADOR 2 (2.20)	16					UR
	1HX–12169–J0	COJIN, AJUSTADOR 2 (2.25)	16					UR
	1HX–12169–L0	COJIN, AJUSTADOR 2 (2.30)	16					UR
	1HX–12169–N0	COJIN, AJUSTADOR 2 (2.35)	16					UR
	1HX–12169–T0	COJIN, AJUSTADOR 2 (2.40)	16					UR
10	5EB–12153–20	LEVANTADOR DE VALVULA	16					UR AZUL
	5EB–12153–30	LEVANTADOR DE VALVULA	16					UR ROJO
	5EB–12153–09	LEVANTADOR DE VALVULA (O/S)	16					AP VERDE

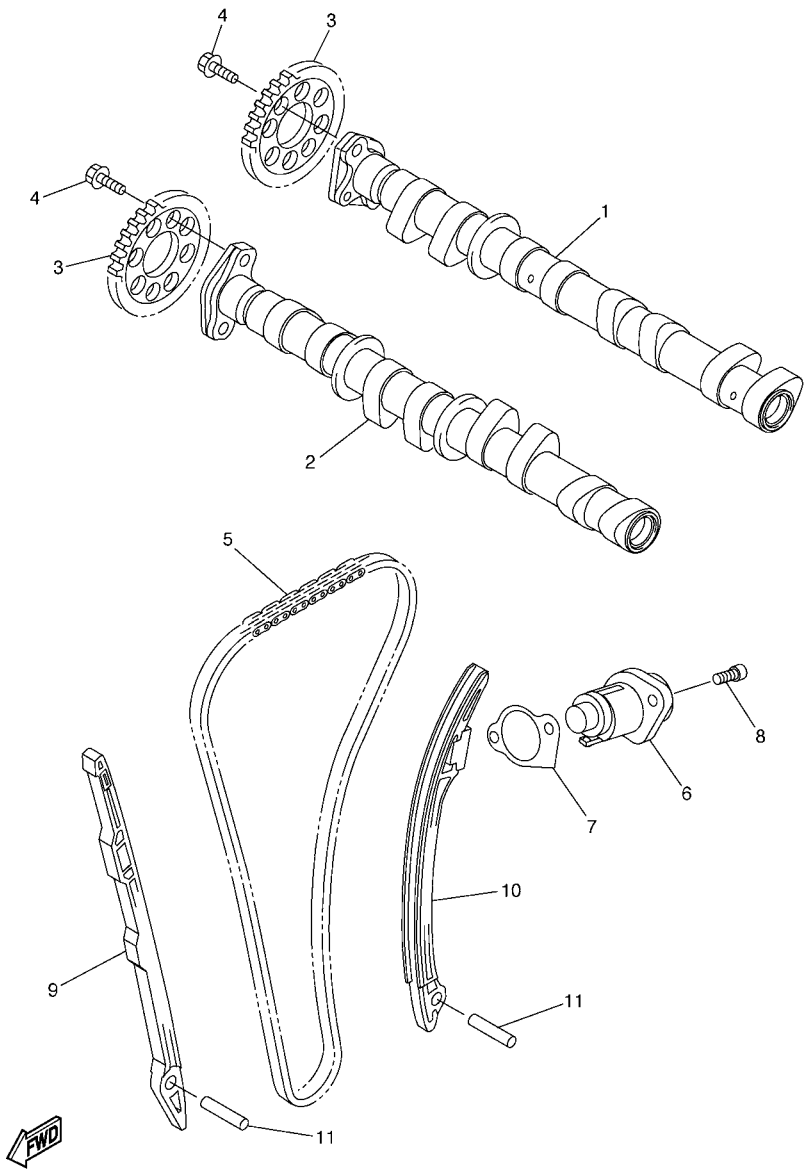

2C01300-E040

FIG. 4 ARBOL DE LEVAS & CADENA

REF. Nº	CODIGO Nº	DESCRIPCION	2C01					OBSERVACIONES
1	2C0–12170–00	ARBOL DE LEVAS COMPLETO 1	1					
2	2C0–12180–00	ARBOL DE LEVAS COMPLETO 2	1					
3	2C0–12176–00	CATALINA DE CADENA	2					
4	90105–07004	TORNILLO	4					
5	94591–61118	CADENA	1					
6	2C0–12210–00	TENSOR CADENA DE LEVA	1					
7	2C0–12213–00	EMPAQUE DE CAJA TENSOR	1					
8	90110–06106	TORNILLO ALLEN	2					
9	2C0–12251–00	AMORTIGUADOR CADENA 1	1					
10	2C0–12252–00	AMORTIGUADOR CADENA 2	1					
11	93607–44190	PASADOR DE CLAVIJA	2					

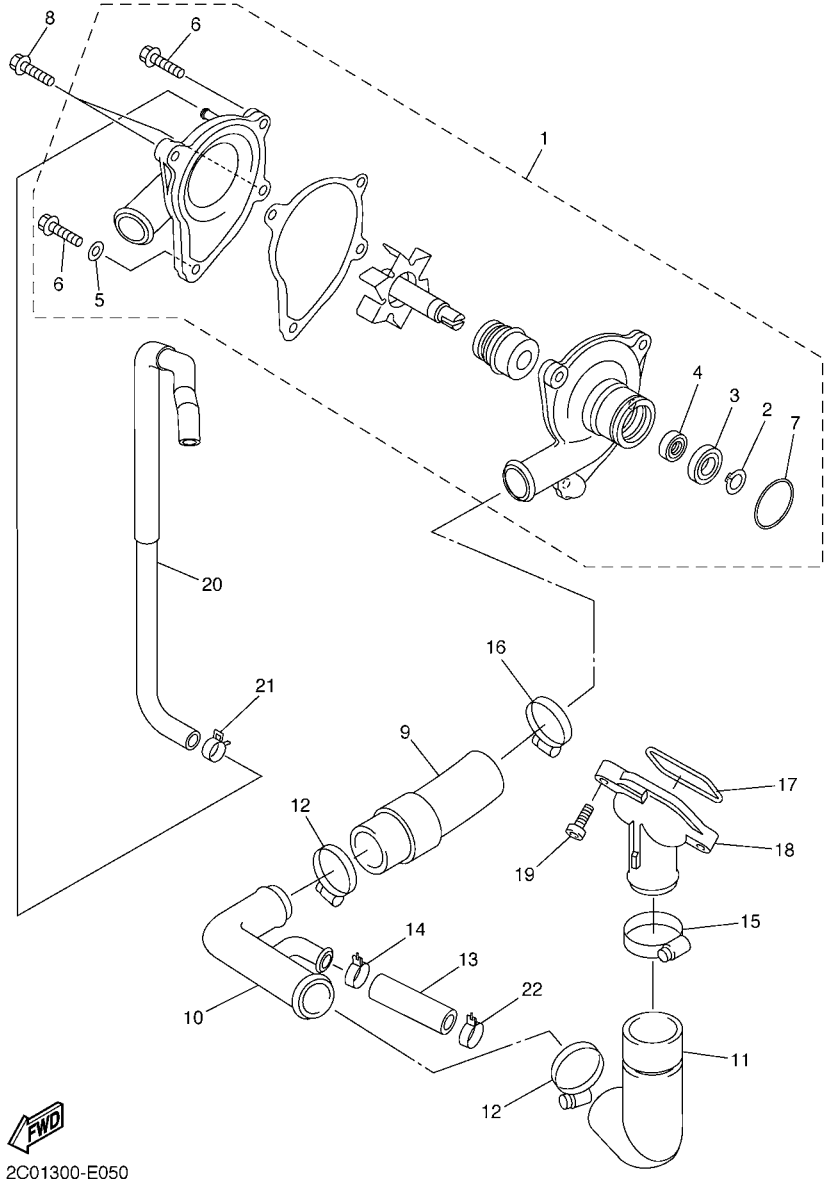

FIG. 5 BOMBA DE AGUA

REF. Nº	CODIGO Nº	DESCRIPCION	2C01					OBSERVACIONES
1	2C0–12420–00	BOMBA DE AGUA COMPLETA	1					
2	99009–10400	.PRESILLA REDONDA	1					
3	93306–00006	.COJINETE	1					
4	93101–10090	.SELLO ACEITE	1					
5	90430–06014	.JUNTA	1					
6	95024–06025	.PERNO, DE BRIDA	2					
7	93210–33133	.ANILLO O	1					
8	90110–06140	TORNILLO ALLEN	2					Go to P/N: PE0-MC-060050
9	2C0–12576–00	MANGUERA 1	1					
10	2C0–12581–00	CONEXION	1					
11	2C0–12577–00	MANGUERA 2	1					
12	90450–35001	BRIDA, MANGUERA	2					
13	2C0–12588–00	MANGUERA 5	1					
14	90467–200A0	PRESILLA	1					
15	90450–38002	BRIDA, MANGUERA	1					
16	90450–32001	BRIDA, MANGUERA	1					
17	93210–46001	ANILLO O	1					
18	5EB–12469–00	CONDUCTO	1					
19	90105–06082	TORNILLO	2					
20	2C0–1243A–00	TUBO 1	1					
21	90467–11090	PRESILLA	2					
22	90467–200A0	PRESILLA	1					

PARTS NEWS

YAMAHA
YAMAHA MOTOR CO., LTD.
2500 SHINGAI IWATA SHIZUOKA JAPAN

News No. PE0-MC-060050

Date: May, 22, 2006

Signature: K.Otsuka

Model	YZF-R6 (2C01,2C02,2C03) YZF-R6V (2C04,2C05,2C07,2C08,2C0A) YZF-R6VC (2C06,2C09)
Subject	PARTS CATALOGUE CORRECTIONS
CATALOGUE NO.	1E2C0-300E1 1E2C0-700E1 1E2C0-332G1 1E2C0-100E1 1E2C0-351F1 1E2C0-100EA 1E2C0-352S1

Revised parts catalogue will be issued by PDF and be uploaded to YPEC within one month.
(YPEC=Yamaha parts Electrical Catalogue = Website parts catalogue)

1. LIST CORRECTION

FIG. 5 WATER PUMP

Ref.No.	OLD P/No.	NEW P/No.	PARTS NAME	Q'TY	REMARKS
5-1	2C0-12420-00	←	WATER PUMP ASSY	1	
5-1-1	————	**2C0-12438-00**	**. SEAL, MECHANICAL**	**1**	**added**
5-1-2	————	**2C0-12450-00**	**. IMPELLER SHAFT ASSY**	**1**	**added**
5-1-3	————	**2C0-12421-00**	**. HOUSING, WATER PUMP**	**1**	**added**
5-1-4	————	**2C0-12428-01**	**. GASKET,HOUSING,COVER2**	**1**	**added**
5-1-5	————	**2C0-W1242-00**	**. COVER, HOUSING**	**1**	**added**

*;These changes are applied from initial production.

2. ILLUSTRATION CORRECTION

Illustration should be read as follows.

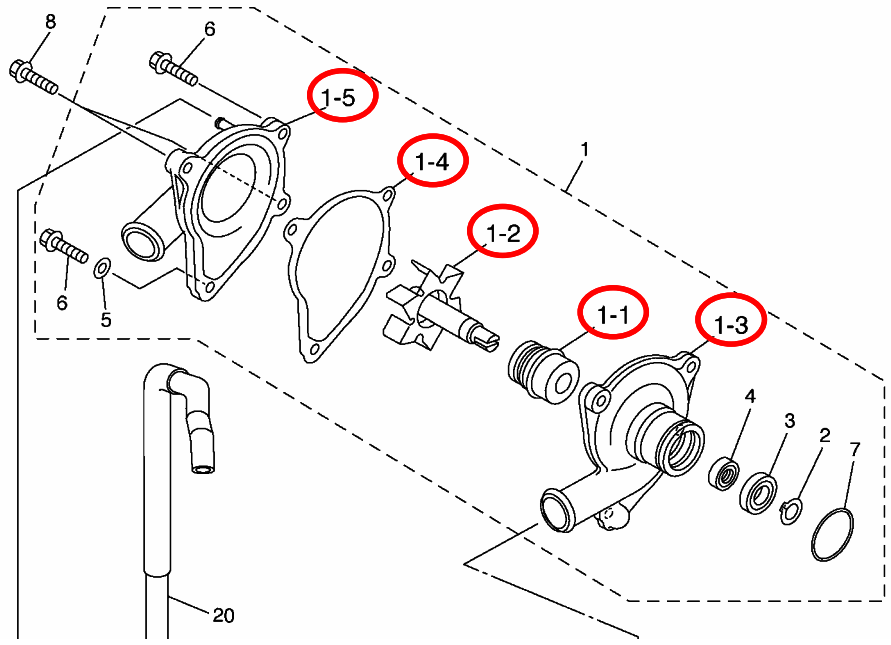

Thank you very much for your cooperation.

Parts Manager Check	Service Manager Check	Parts Manager File

YAMAHA MOTOR CO.,LTD
2500 Shingai Iwata Shizuoka 438-8501.Japan
Tech. Pub. & Quality Coordination Dept.

YAMAHA GENUINE Parts & Accessories

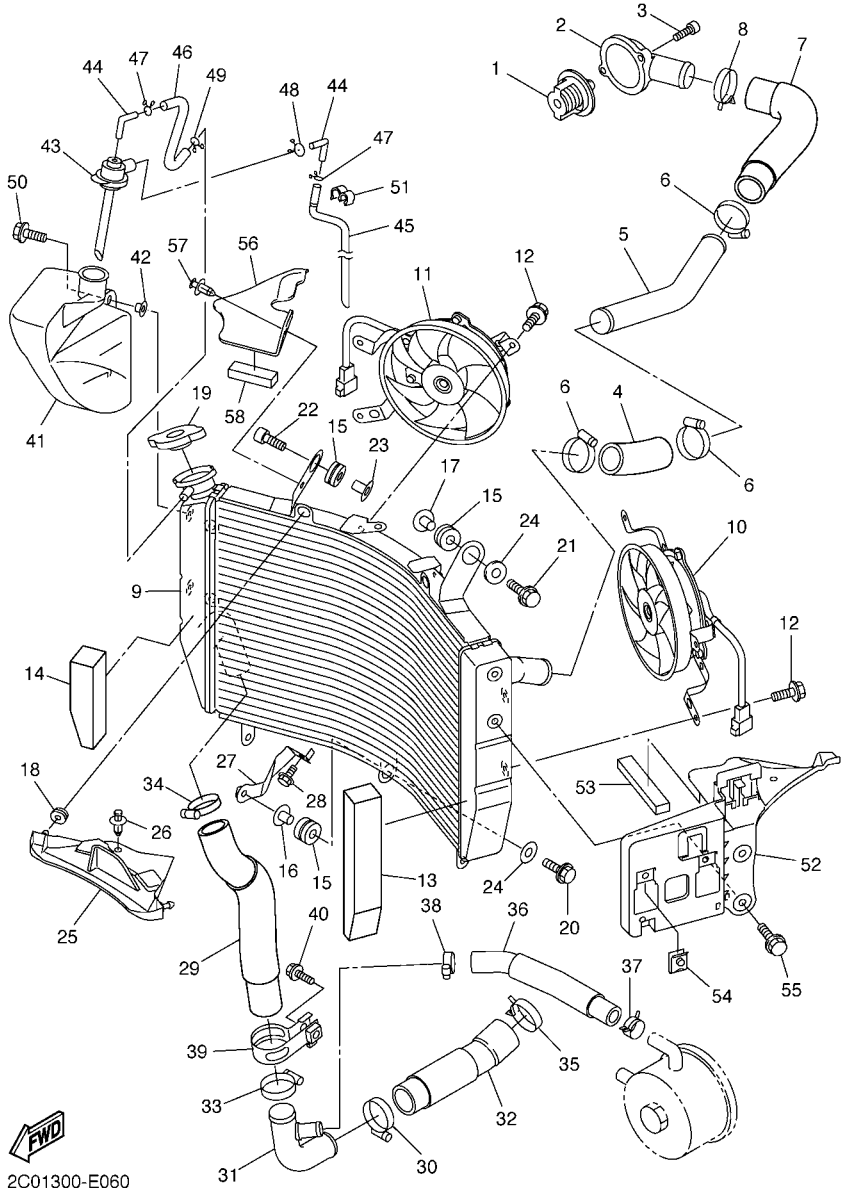

FIG. 6 RADIADOR & MANGUERA

REF. Nº	CODIGO Nº	DESCRIPCION	2C01					OBSERVACIONES
1	5SL–12410–00	TERMOSTATO CONJUNTO	1					
2	2C0–12413–00	CUBIERTA TERMOSTATO	1					
3	91312–06020	TORNILLO	2					
4	2C0–12578–00	MANGUERA 3	1					
5	2C0–12481–00	TUBO 1	1					
6	90450–35001	BRIDA, MANGUERA	3					
7	2C0–12552–00	MANGUERA 8	1					
8	90467–29174	PRESILLA	1					
9	2C0–12461–00	RADIADOR COMPLETO	1					
10	2C0–12405–00	COMPRESOR	1					
11	2C0–12405–10	COMPRESOR	1					
12	5GJ–12675–00	PERNO, SUJECION VENTILADOR	6					
13	2C0–12659–00	AMORTIGUADOR DE CUBIERTA 2	1					
14	2C0–12668–00	AMORTIGUADOR DE CUBIERTA 3	1					
15	90480–15363	TAPON	3					
16	90387–07391	ESPACIADOR	1					
17	90387–0614M	ESPACIADOR	1					
18	90480–11005	TAPON	2					
19	5SL–12462–00	TAPON, DEL RADIADOR	1					
20	90105–06040	TORNILLO	1					
21	95807–06035	TUERCA DE REBORDE	1					
22	91317–06035	PERNO	1					
23	90387–0614M	ESPACIADOR	1					
24	90201–06071	ARANDELA PLANA	2					
25	2C0–12535–00	EMPAQUETADURA	1					
26	90269–07007	REMACHE	1					
27	2C0–1244E–00	SOPORTE 1	1					

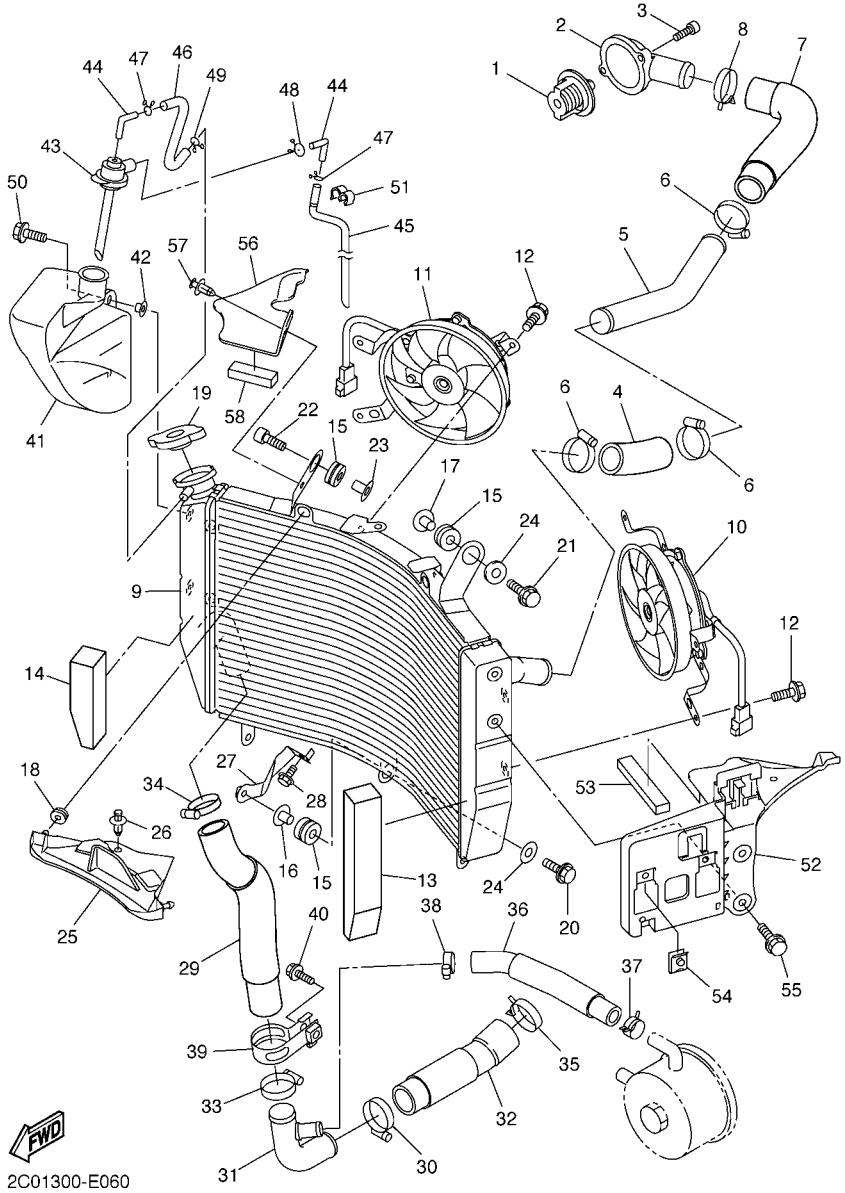

FIG. 6 RADIADOR & MANGUERA

REF. Nº	CODIGO Nº	DESCRIPCION	2C01					OBSERVACIONES
28	95827–06012	TUERCA DE REBORDE	1					
29	2C0–12579–00	MANGUERA 4	1					
30	90450–35001	BRIDA, MANGUERA	1					
31	2C0–12582–00	CONEXION	1					
32	2C0–12551–00	55 PLACA	1					
33	90450–35001	BRIDA, MANGUERA	1					
34	90450–35001	BRIDA, MANGUERA	1					
35	90467–310A0	PRESILLA	1					
36	2C0–12589–00	MANGUERA 6	1					
37	90467–200A0	PRESILLA	1					
38	90450–22017	BRIDA, MANGUERA	1					
39	2C0–12491–00	GRAMPA 1	1					
40	95027–10020	PERNO, DE BRIDA	1					
41	2C0–21871–00	TANQUE DE RECUPERACION	1					
42	90387–06681	ESPACIADOR	2					
43	2C0–21875–00	TAPA	1					
44	26H–21828–00	CODO	2					
45	2C0–21816–00	TUBO 1	1					
46	2C0–1243F–00	MANGUERA 3	1					
47	90467–08003	PRESILLA	2					
48	90467–10M04	PRESILLA	1					
49	90467–08003	PRESILLA	1					
50	95807–06014	TUERCA DE REBORDE	2					
51	90464–10M38	BRIDA	1					
52	2C0–2836H–00	MENSULA 5	1					
53	2C0–2139X–00	AMORTIGUADOR	1					
54	90183–06069	TUERCA DE RESORTE	2					

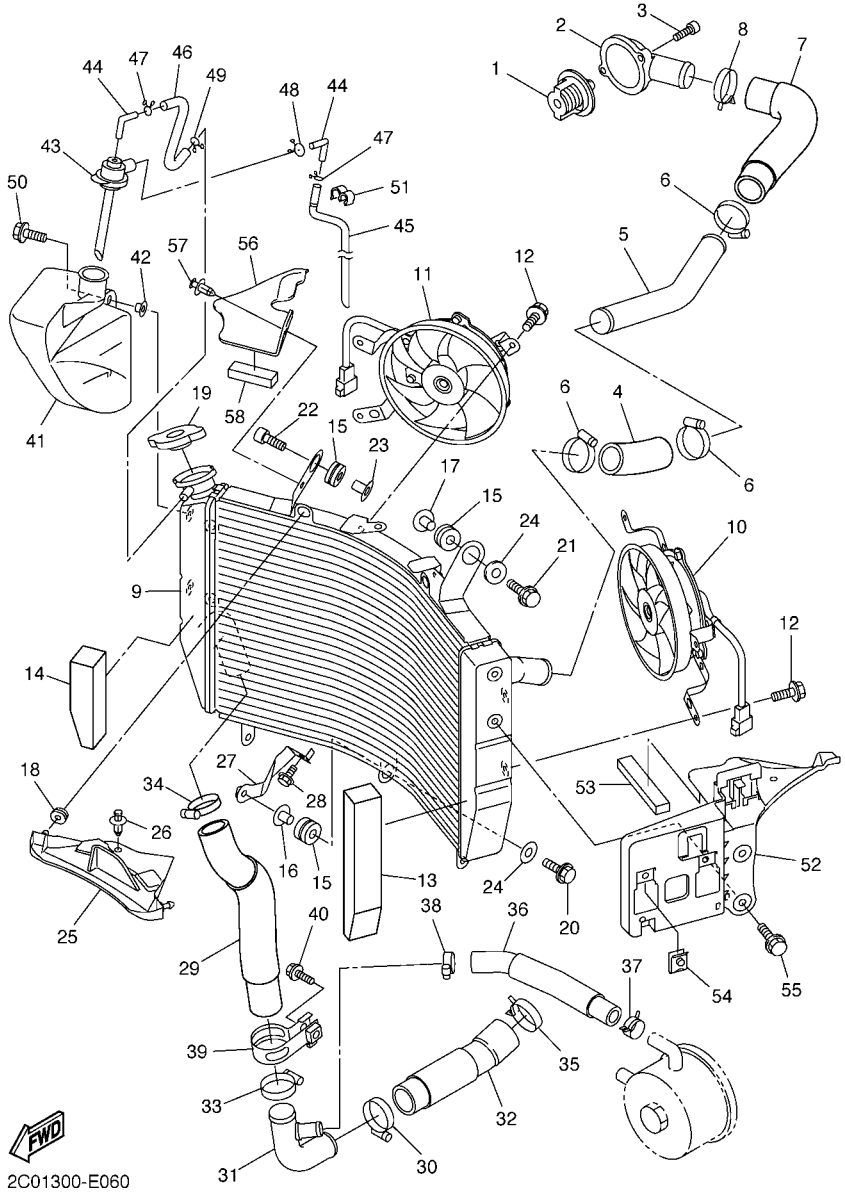

FIG. 6 RADIADOR & MANGUERA

REF. Nº	CODIGO Nº	DESCRIPCION	2C01					OBSERVACIONES
55	95807–06014	TUERCA DE REBORDE	2					
56	2C0–1246H–00	CUBIERTA 5	1					
57	90269–06083	REMACHE	1					
58	2C0–2139U–00	AMORTIGUADOR 2	1					

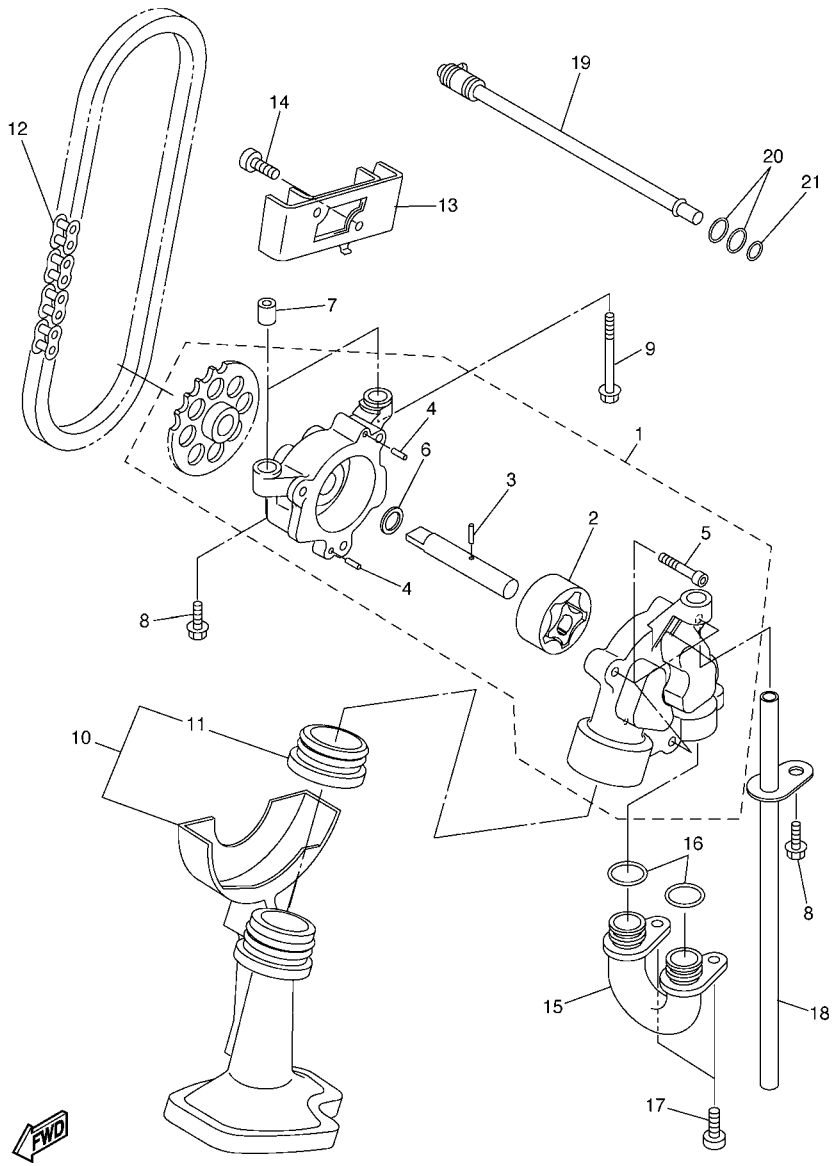

2C01300-E070

FIG. 7 BOMBA DE ACEITE

REF. Nº	CODIGO Nº	DESCRIPCION	2C01					OBSERVACIONES
1	2C0–13300–00	BOMBA DE ACEITE COMPLETA	1					
2	4SV–13310–00	.ROTOR COMPLETO 1	1					
3	93603–17070	.PASADOR DE CLAVIJA	1					
4	93603–09106	.PASADOR DE CLAVIJA	2					
5	91312–06025	.TORNILLO	3					
6	90201–113K2	.ARANDELA PLANA	1					
7	91808–17032	PASADOR DE CLAVIJA	2					
8	95812–06030	TORNILLO DE REBORDE	2					
9	95812–06080	TORNILLO DE REBORDE	1					
10	2C0–13410–00	CAJA DE FILTRO COMPLETA	1					
11	2C0–13415–00	.SELLO COLADOR ACEITE	1					
12	94580–25074	CADENA	1					
13	2C0–13898–00	SOSTEN	1					
14	90110–06161	TORNILLO ALLEN	2					
15	2C0–13416–00	TUBO DE ACEITE 1	1					
16	93210–14003	ANILLO O	2					
17	90110–06161	TORNILLO ALLEN	2					
18	5EB–13161–00	TUBO CONDUCTOR 1	1					
19	2C0–1316E–00	TUBO, DE ENTREGA 5	1					
20	93210–09165	ANILLO O	2					
21	93210–06667	ANILLO O	1					

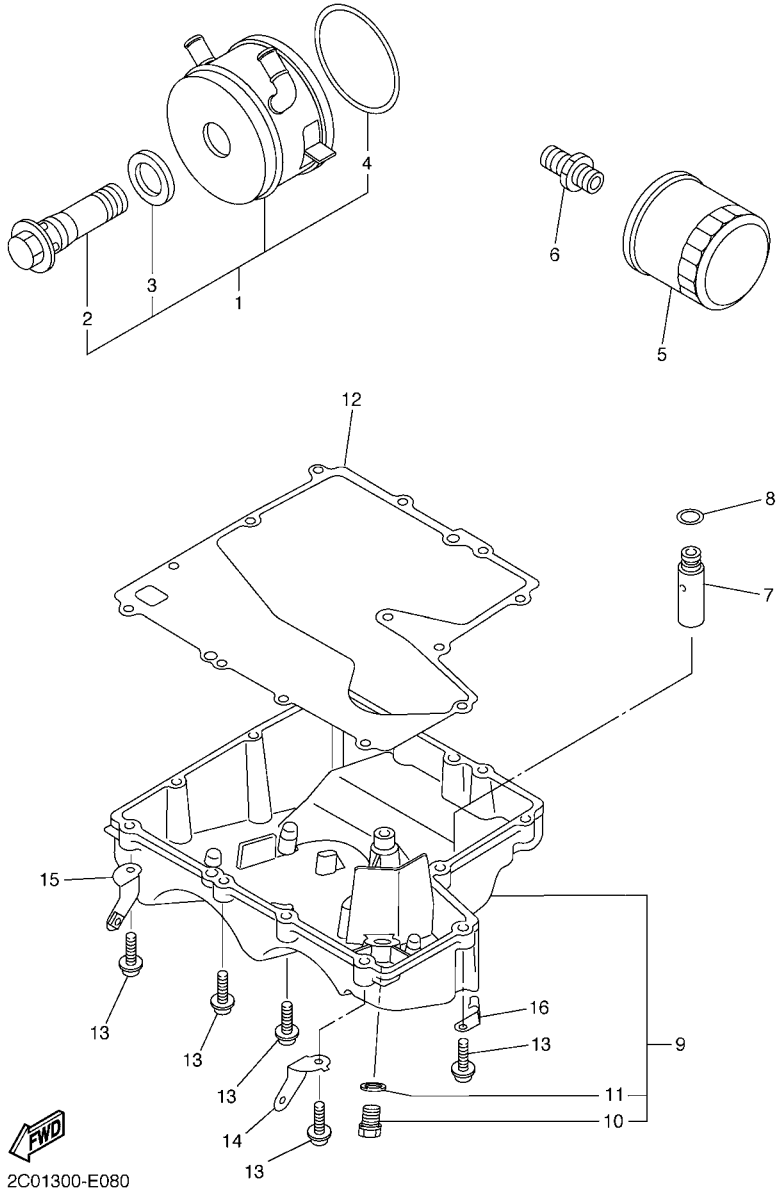

FIG. 8 FILTRO ACEITE

REF. Nº	CODIGO Nº	DESCRIPCION	2C01					OBSERVACIONES
1	2C0–13470–00	ENFRIADOR DE ACEITE COMPLETO	1					
2	5EB–12822–00	.PERNO DE UNION	1					
3	5EB–13475–00	.EMPAQUE	1					
4	5JW–13473–00	.ANILLO O	1					
5	5GH–13440–20	ELEMENTO FILTRO DE ACEITE	1					
6	90401–20145	PERNO DE UNION	1					
7	2C0–13490–00	VALVELA DE DESCOMPRESION	1					
8	93210–15566	ANILLO O	1					
9	2C0–13417–00	TAPA DE FILTRO	1					
10	90340–14132	.TORNILLO, DE DRENAJE	1					
11	214–11198–01	.EMPAQUE	1					
12	2C0–13414–00	EMPAQUE DE TAPA FILTRO	1					
13	90109–06015	PERNO	13					
14	2C0–2836A–00	SOPORTE 1	1					
15	2C0–2836E–00	SOPORTE 2	1					
16	90465–10040	BRIDA	1					

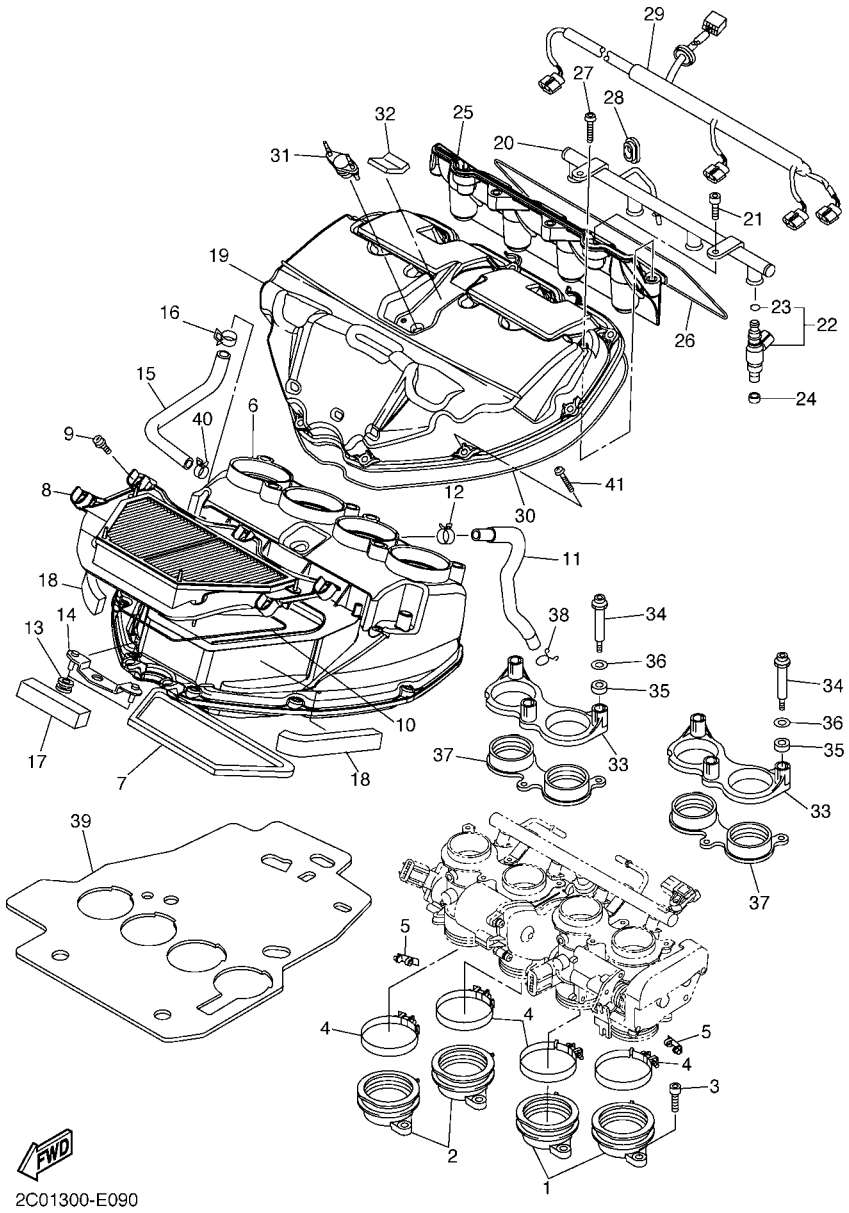

FIG. 9 ADMISION

REF. Nº	CODIGO Nº	DESCRIPCION	2C01					OBSERVACIONES
1	2C0–13586–00	TOBERA DE CARBURADOR 1	2					
2	2C0–13596–00	TOBERA DE CARBURADOR 2	2					
3	91312–06016	TORNILLO	8					
4	90450–56007	BRIDA, MANGUERA	4					
5	2C0–13881–00	CUBIERTA 1	2					
6	2C0–14411–00	CAJA FILTRO DEL AIRE 1	1					
7	2C0–14467–00	SELLO	1					
8	2C0–14450–00	ELEMENTO COMP.FILTRO DE AIRE	1					
9	90149–05012	TORNILLO DE REGLAJE	5					
10	2C0–14462–00	SELLO	1					
11	2C0–15373–00	MANGUELA DE RESPIRADERO	1					
12	90467–15001	PRESILLA	1					
13	90480–08264	TAPON	2					
14	5VY–14498–00	SOPORTE 1	1					
15	2C0–14882–00	TUBO 2	1					
16	90467–17128	PRESILLA	1					
17	2C0–14409–00	AMORTIGUADOR	1					
18	2C0–14425–00	AMORTIGUADOR 1	2					
19	2C0–14421–00	CAJA FILTRO DEL AIRE 2	1					
20	2C0–13938–00	TUBO DE ADMISION	1					
21	90110–06168	TORNILLO ALLEN	2					
22	2C0–13761–10	INYECTOR	4					
23	5PS–14147–00	.ANILLO O	1					
24	90430–09002	JUNTA	4					
25	2C0–13767–00	TAPA DE INJECTOR	1					
26	2C0–1446R–00	SELLO	1					
27	92012–06020	PERNO	4					

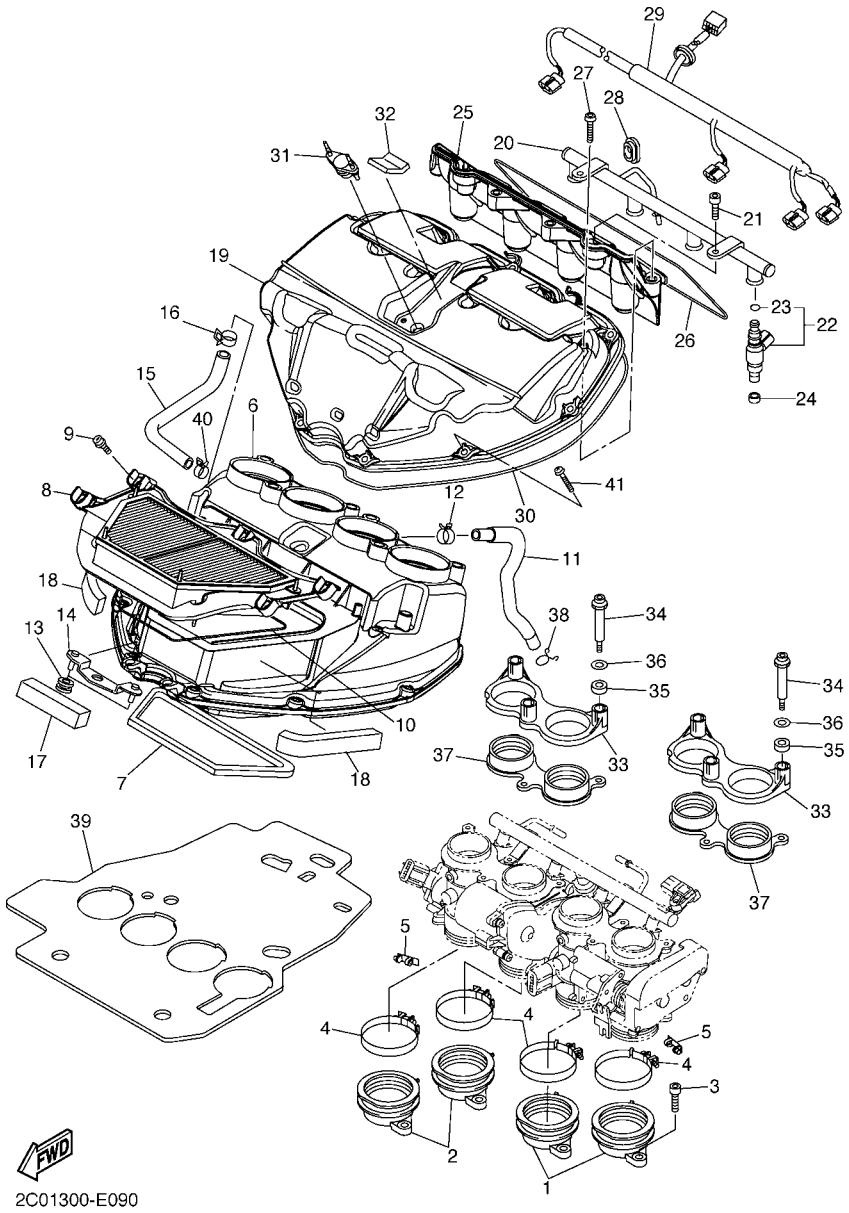

FIG. 9 ADMISION

REF. Nº	CODIGO Nº	DESCRIPCION	2C01					OBSERVACIONES
28	90480–01020	TAPON	1					
29	2C0–82318–00	CABLE SUBCONDUCTOR	1					
30	2C0–14452–00	SELLO	1					
31	2C0–14435–00	ANILLO PROTECTOR	1					
32	2C0–14426–00	AMORTIGUADOR 2	1					
33	2C0–14469–00	EMBUDO PARA AIRE	2					
34	90109–05006	PERNO	6					
35	2C0–14476–00	SELLO	6					
36	90201–082A9	ARANDELA PLANA	6					
37	2C0–14454–00	PASADOR DE PALANCA	2					
38	90467–14015	PRESILLA	1					
39	2C0–12682–00	PROTECTOR	1					
40	90467–180A0	PRESILLA	1					
41	98902–05025	TORNILLO DE AJUSTE	9					

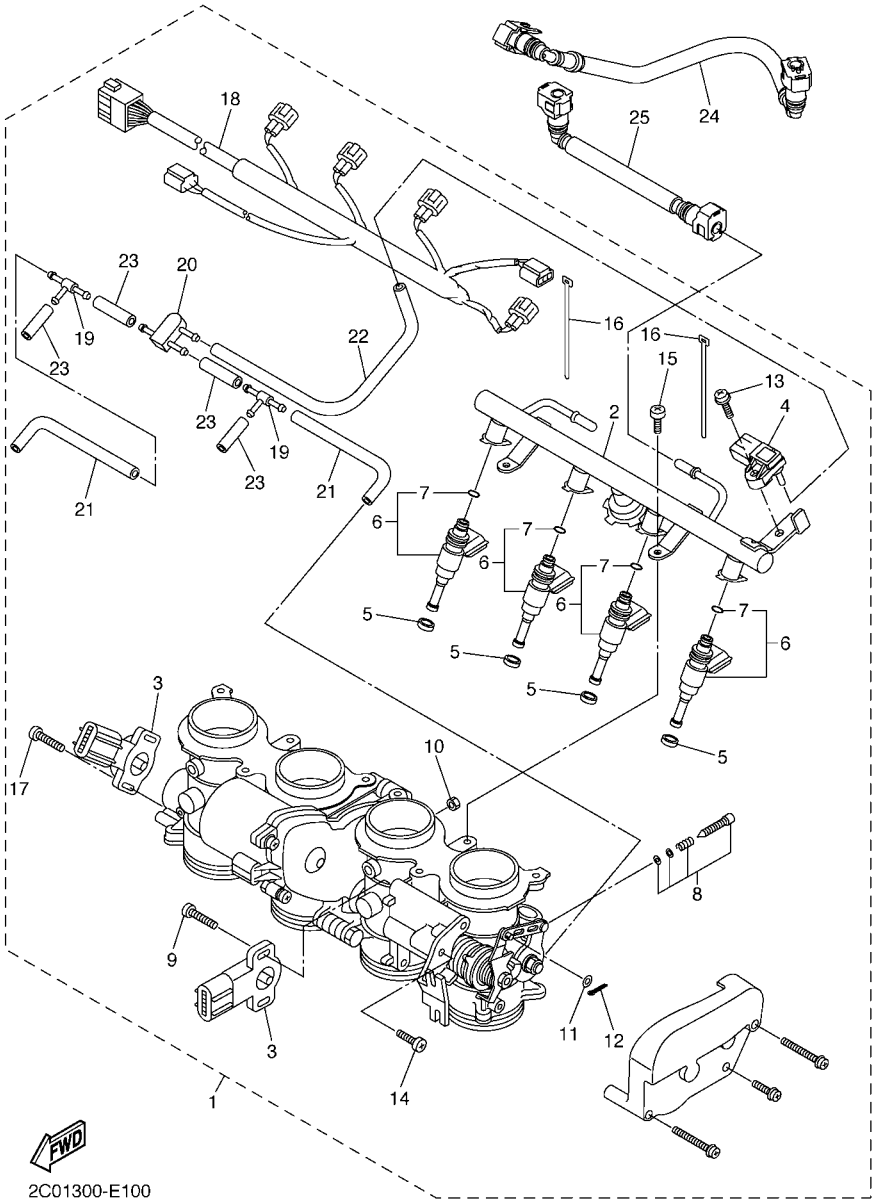

FIG. 10 ADMISION 2

REF. Nº	CODIGO Nº	DESCRIPCION	2C01					OBSERVACIONES
1	2C0–13750–00	CAJA DE ACELERADOR COMPL.	1					
2	2C0–13160–00	.TUBO DE LLEGADA CONJUNTO 1	1					
3	2C0–85885–00	.TERMICA SENSORIO	2					
4	2C0–82380–00	.SENSOR DE PRESION	1					
5	8FP–13556–00	.EMPAQUE	4					
6	2C0–13761–00	.INYECTOR	4					
7	5PS–14147–00	..ANILLO O	1					
8	2C0–14105–00	.TORNILLO DE PILOTO	4					
9	5FL–14216–00	.TORNILLO	2					
10	95307–04700	.TUERCA	1					
11	22U–14952–00	.ARANDELA	1					
12	91492–12010	.PASADOR DE CHAVETA	1					
13	2C0–14216–00	.TORNILLO	1					
14	98507–05012	.TORNILLO DE CABEZA PLANA	2					
15	98507–06012	.TORNILLO DE CABEZA PLANA	2					
16	4KM–14137–00	.PRESILLA	2					
17	8CC–14216–10	.TORNILLO	2					
18	2C0–82386–00	.EXTENSION, ARNES DE CABLES	1					
19	68V–24376–00	.TUBO DE UNION 1	2					
20	3XV–14251–00	.NIPLE	1					
21	68V–13533–00	.MANGUERA, DE VACIO 4	2					
22	2C0–13532–00	.MANGUERA, DE VACIO 3	1					
23	5FL–14348–10	.MANGUERA	4					
24	2C0–13971–00	ANILLO DE ESPACIADOR	1					
25	2C0–13972–00	TUBO, COMBUSTIBLE 2	1					

FIG. 11 SYSTEMA DE INDUCCION DE AIRE

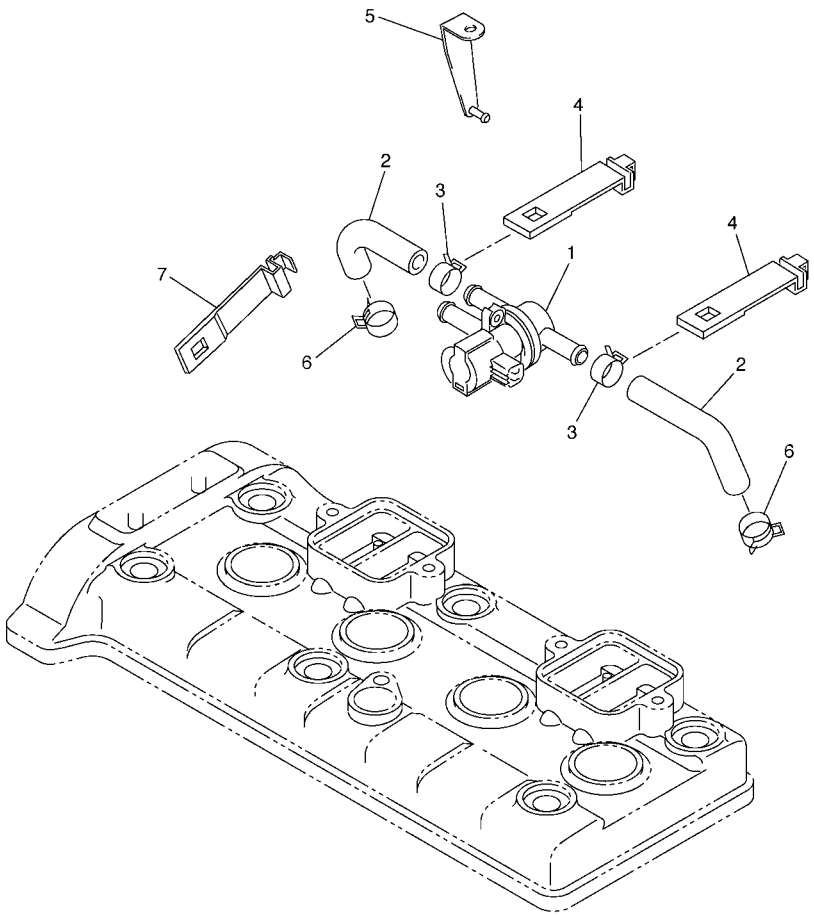

2C01300-E110

REF. Nº	CODIGO Nº	DESCRIPCION	2C01					OBSERVACIONES
1	2C0–14840–00	VALVULA, CORTE DE AIRE	1					
2	2C0–14881–00	TUBO 1	2					
3	90467–18172	PRESILLA	2					
4	5JW–14723–00	CUBIERTA	2					
5	2C0–21249–00	SOPORTE	1					
6	90467–180A0	PRESILLA	2					
7	5JW–14723–00	CUBIERTA	1					

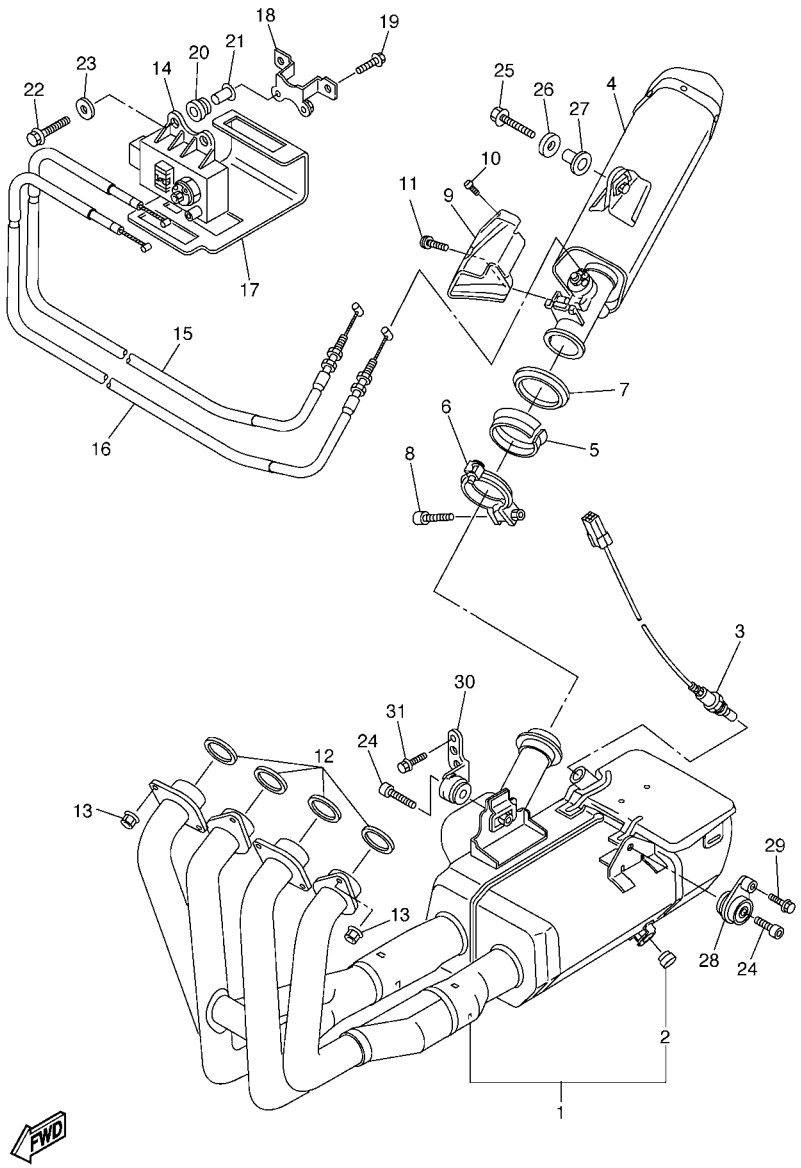

2C01300-E120

FIG. 12 DESCARGA

REF. Nº	CODIGO Nº	DESCRIPCION	2C01					OBSERVACIONES
1	2C0–14610–00	TUBO DE ESCAPE COMPLETO 1	1					
2	4FM–24181–00	.AMORTIGUADOR DE MONTAJE 1	2					
3	2C0–8592A–00	SENSOR	1					
4	2C0–14753–00	SILENCIADOR DE ESCAPE	1					
5	2C0–14618–00	ANILLO DE TOPE	1					
6	2C0–14725–00	BANDA DE SILENCIADOR	1					
7	2C0–14623–00	EMPAQUE	1					
8	91314–06030	PERNO	1					
9	2C0–14718–00	PROTECTOR DE SILENCIADOR 1	1					
10	90111–06010	TORNILLO	2					
11	90111–06071	TORNILLO	1					
12	4FM–14613–00	JUNTA, TUBO DE ESCAPE	4					
13	90179–08410	TUERCA	8					
14	2C0–85820–00	UNIDADDELSERVOMOTOR	1					
15	2C0–1133E–00	CABLE DE POLEA	1					
16	2C0–1133F–00	CABLE DE POLEA	1					
17	2C0–2177F–00	CUBIERTA	1					
18	2C0–2116J–00	SOPORTE 7	1					
19	95027–06012	PERNO, DE BRIDA	2					
20	90480–14005	TAPON	2					
21	90387–063E6	ESPACIADOR	2					
22	95027–06025	PERNO, DE BRIDA	2					
23	90201–06M31	ARANDELA PLANA	2					
24	91314–08035	PERNO	2					
25	90105–08063	TORNILLO	1					
26	90201–087G2	ARANDELA PLANA	1					
27	90387–08021	ESPACIADOR	1					

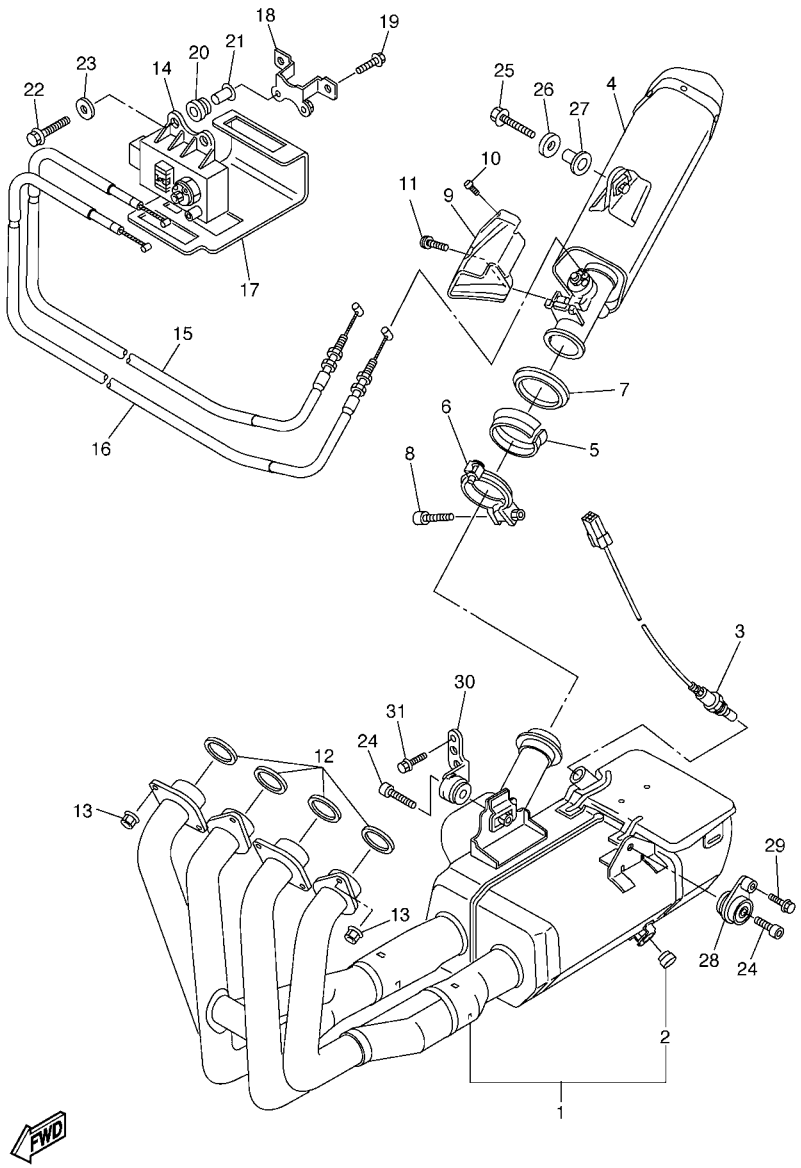

2C01300-E120

FIG. 12 DESCARGA

REF. Nº	CODIGO Nº	DESCRIPCION	2C01					OBSERVACIONES
28	2C0–21446–00	SOPORTE DE SILENCIADOR 2	1					
29	90105–08054	TORNILLO	1					
30	2C0–21445–00	SOPORTE DE SILENCIADOR 1	1					
31	90105–083A2	TORNILLO	1					

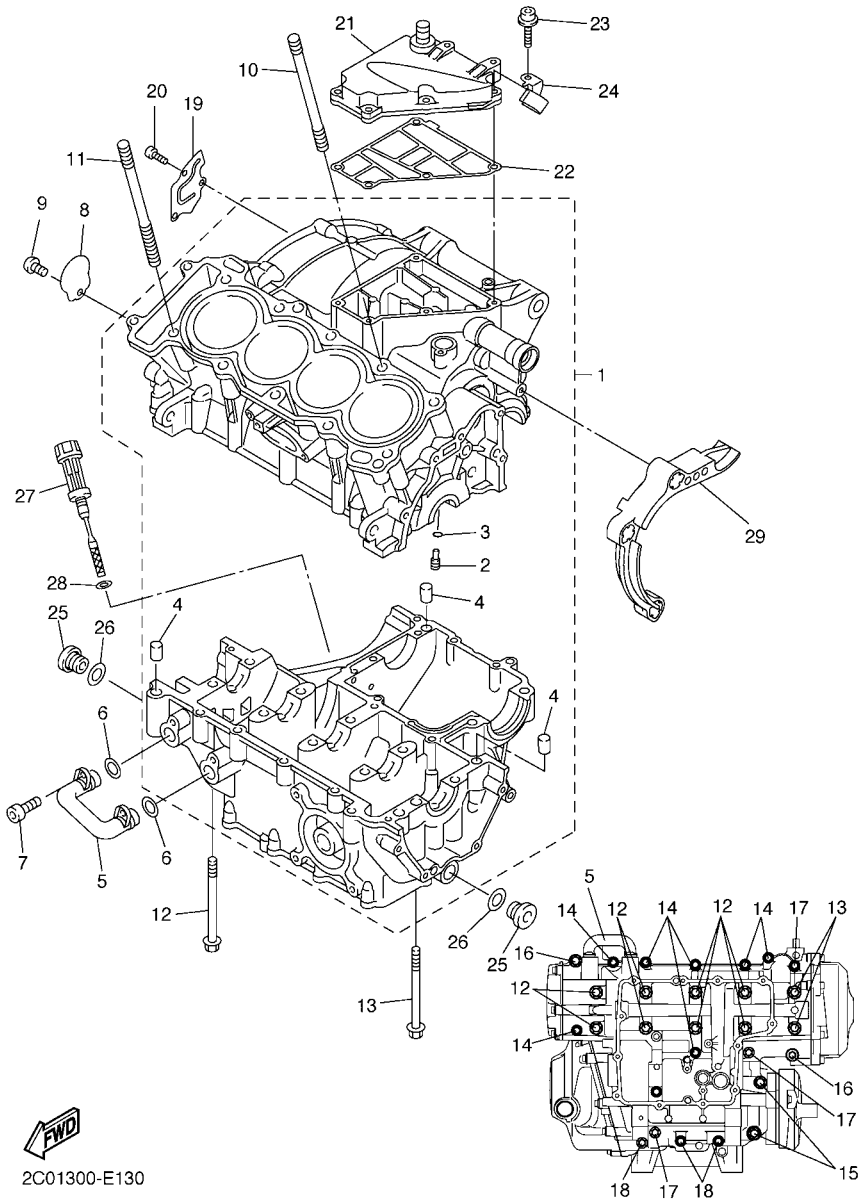

FIG. 13 CARTER

REF. Nº	CODIGO Nº	DESCRIPCION	2C01					OBSERVACIONES
1	2C0–15100–00	CARTER COMPLETO	1					
2	5EB–15155–00	.BOQUILLA 3	4					
3	93210–04092	.ANILLO O	4					
4	99530–10014	.PASADOR, DE ESPIGA	3					
5	5VX–13418–00	TUBO DE ACEITE 2	1					
6	93210–14579	ANILLO O	2					
7	90110–06161	TORNILLO ALLEN	2					
8	2C0–15189–00	TAPON	1					
9	90149–06082	TORNILLO DE REGLAJE	1					
10	90116–10025	ESPARRAGO	1					
11	90116–10026	ESPARRAGO	9					
12	90119–08083	TORNILLO CON ARANDELA	8					
13	90119–08084	TORNILLO CON ARANDELA	2					
14	95812–06055	TORNILLO DE REBORDE	7					
15	95812–08065	TORNILLO DE REBORDE	2					
16	90109–06100	PERNO	2					
17	95812–06065	TORNILLO DE REBORDE	3					
18	95812–06045	TORNILLO DE REBORDE	3					
19	2C0–11165–00	PLACA RESPIRADERO	1					
20	90149–06082	TORNILLO DE REGLAJE	3					
21	2C0–15413–00	CUBIERTA	1					
22	2C0–15462–00	EMPAQ CUBIERTA DE CARTER 3	1					
23	90109–06015	PERNO	5					
24	2C0–24136–10	GRAMPA 2	1					
25	36Y–15189–00	TAPON	2					
26	93210–16325	ANILLO O	2					
27	2C0–15362–00	TAPON DEL NIVEL DE ACEITE	1					

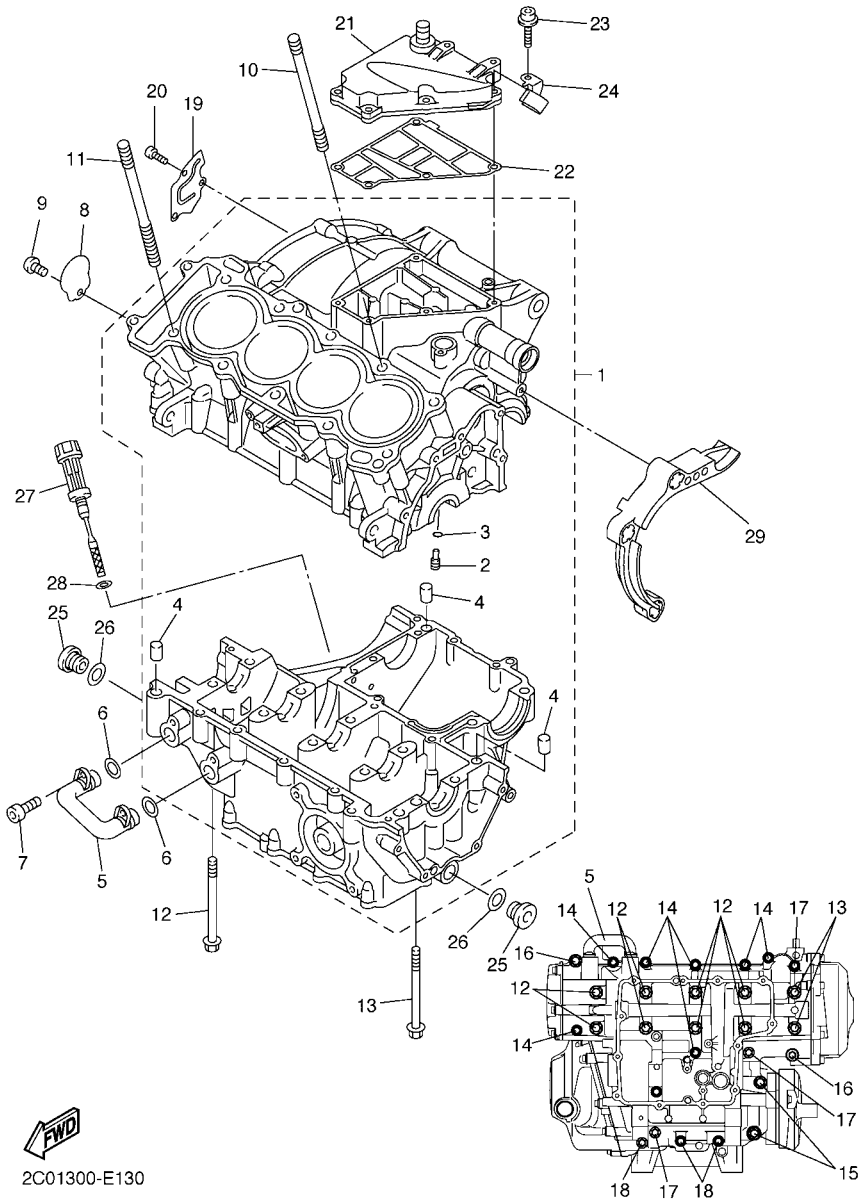

FIG. 13 CARTER

REF. Nº	CODIGO Nº	DESCRIPCION	2C01					OBSERVACIONES
28	93210–09165	ANILLO O	1					
29	2C0–15377–00	GUIA DE ENTRADA	1					

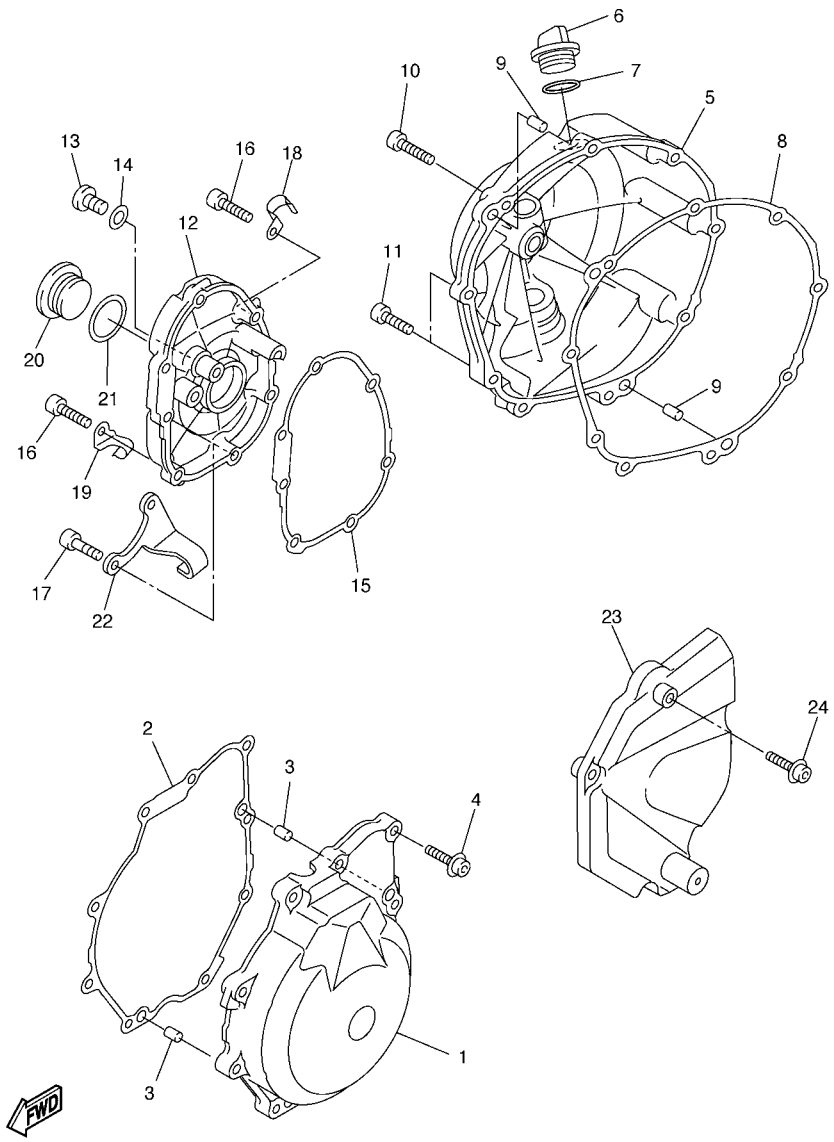

2C01300-E140

FIG. 14 CUBIERTA DE CARTER 1

REF. Nº	CODIGO Nº	DESCRIPCION	2C01					OBSERVACIONES
1	2C0–15411–00	CUBIERTA DE CARTER 1	1					
2	2C0–15451–00	EMPAQ DE CUBIERTA DE CARTER	1					
3	99530–08012	PASADOR, DE ESPIGA	2					
4	90109–06015	PERNO	9					
5	2C0–15421–00	TAPA DE CARTER DERECHA	1					
6	3F9–15362–00	TAPON DEL NIVEL DE ACEITE	1					
7	93210–27194	ANILLO O	1					
8	2C0–15461–00	JUNTA TAPA CARTER DRCHO	1					
9	93608–17263	PASADOR DE CLAVIJA	2					
10	90109–06031	PERNO	7					
11	90110–06156	TORNILLO ALLEN	2					
12	2C0–15416–00	CUBIERTA DE BOMBA DE ACEITE	1					
13	92014–08014	PERNO	1					
14	90430–08143	JUNTA	1					
15	2C0–15456–00	EMPAQ CUBTA.BOMBA ACEITE 1	1					
16	90109–06014	PERNO	5					
17	90109–06015	PERNO	2					
18	90465–08395	BRIDA	1					
19	2C0–21823–00	GRAMPA DE MANGUERA	1					
20	90340–32004	TORNILLO, DE DRENAJE	1					
21	93210–32172	ANILLO O	1					
22	2C0–15441–00	SOSTEN DE CABLE DE EMBRAGUE	1					
23	2C0–15418–00	CUBIERTA CAJA DE CADENA	1					
24	90110–06060	TORNILLO ALLEN	3					

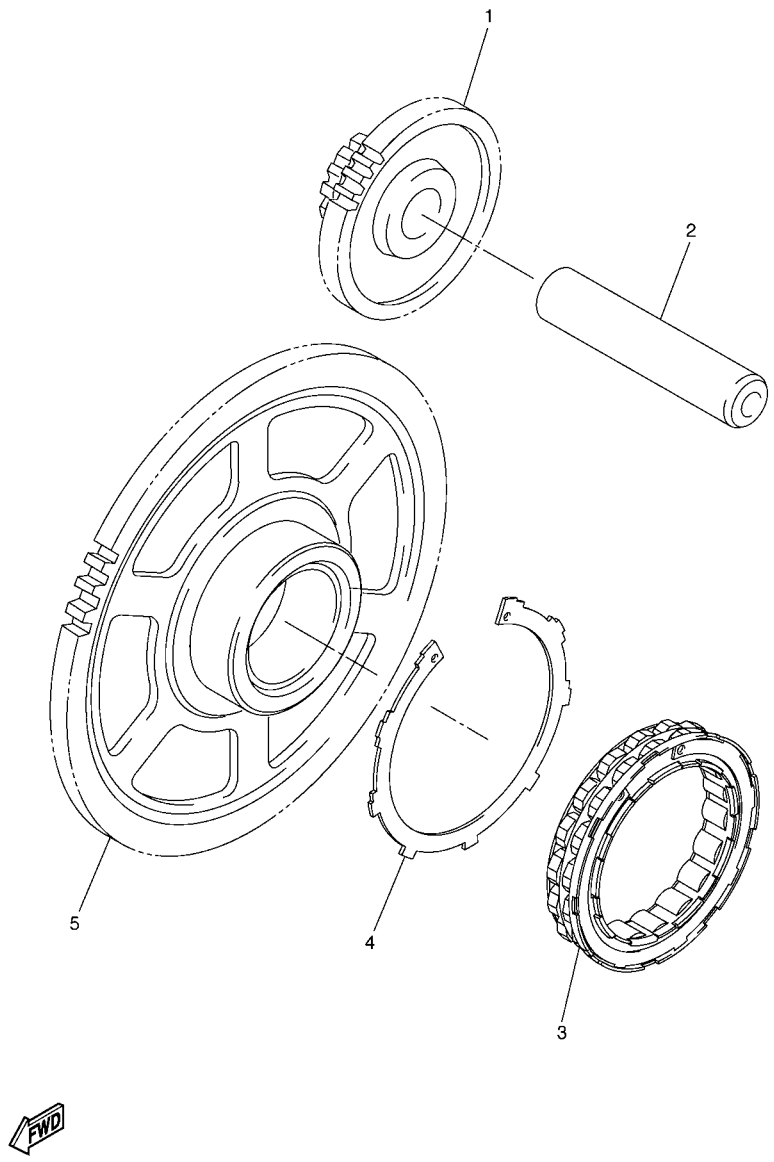

FIG. 15 ARRANQUE

REF. Nº	CODIGO Nº	DESCRIPCION	2C01					OBSERVACIONES
1	2C0–15512–00	ENGRENAJE NEUTRO	1					
2	5MT–15521–00	EJE 1	1					
3	2C0–15580–00	ENSAMBLE EXT.EMBRAGUE ARRANQUE	1					
4	2C0–15536–00	GRAMPA DE ARRANQUE	1					
5	2C0–15515–00	ENGRANAJE 3	1					

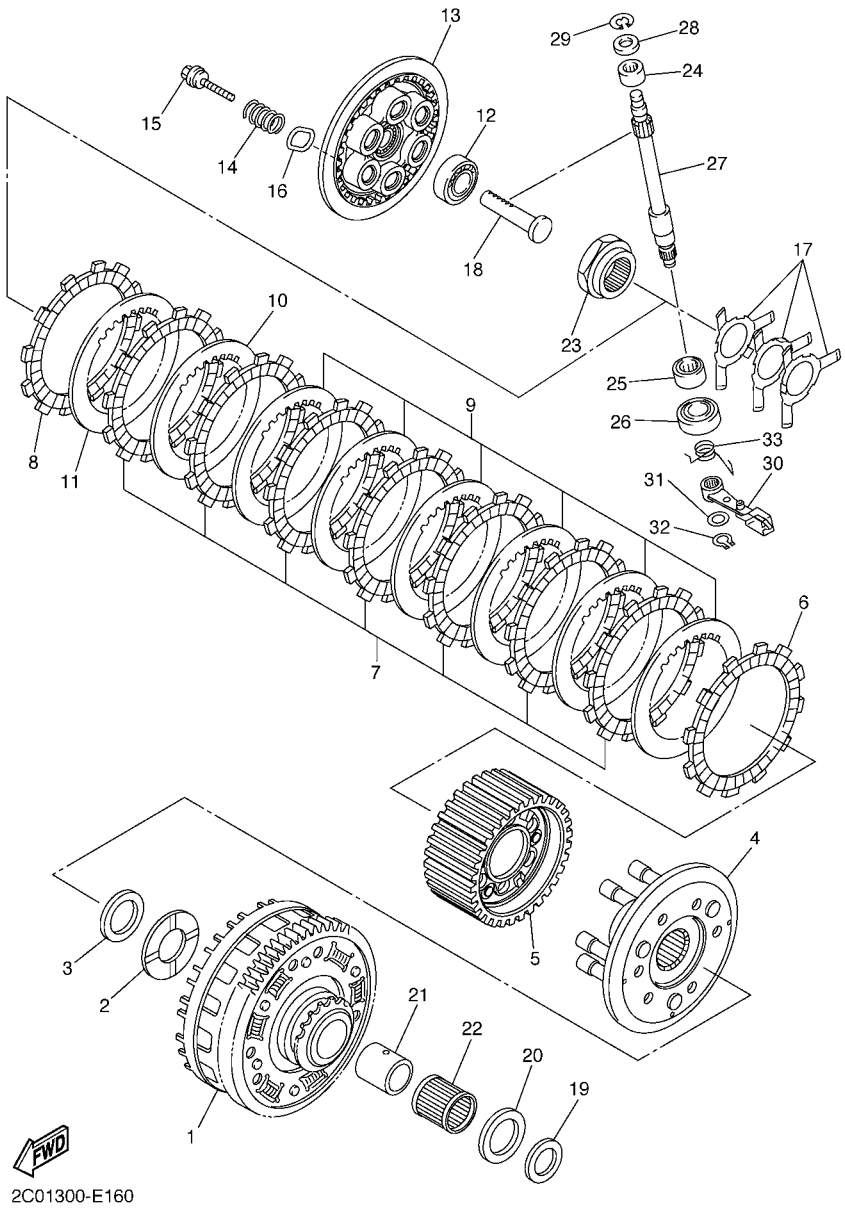

FIG. 16 EMBRAGUE

REF. Nº	CODIGO Nº	DESCRIPCION	2C01					OBSERVACIONES
1	2C0–16150–00	CAMPANA DE EMBRAGUE	1					
2	2C0–16154–00	ARANDELA, DE EMPUJE 1	1					
3	90208–25002	ARANDELA DE RESORTE CONICO	1					
4	2C0–16360–00	PLACA DE PRESION COMPL. 2	1					
5	2C0–16370–00	COPA DE EMBRAGUE COMPLETA	1					
6	5SL–16321–00	PLACA DE FRICCION	1					
7	5LV–16321–20	PLACA DE FRICCION	7					
8	4FN–16321–00	PLACA DE FRICCION	1					
9	3J2–16324–00	DISCO, DE EMBRAGUE (T=2.0)	6					
10	3J2–16324–00	DISCO, DE EMBRAGUE (T=2.0)	1					
11	3J2–16324–00	DISCO, DE EMBRAGUE (T=2.0)	1					
12	93306–00106	COJINETE	1					
13	2C0–16351–00	PLATO DE PRESION	1					
14	90501–220A2	RESORTE DE COMPRESION	6					
15	90159–06024	TORNILLO CON VALONA	6					
16	2C0–16384–00	PLACA DE ASIENTO	6					
17	2C0–16539–00	RESORTE	3					
18	2C0–16356–00	VARILLA DE EMPUJE 1	1					
19	2C0–16164–00	PLACA DE EMPUJE 2	1					
20	1AE–16164–00	PLACA DE EMPUJE 2	1					
21	2C0–16181–00	SEPARADOR	1					
22	93310–340N8	COJINETE DE RODILLOS	1					
23	2C0–16377–00	TUERCA DE CIERRE	1					
24	93317–11096	COJINETE	1					
25	93315–21570	COJINETE DE RODILLOS	1					
26	93102–15212	SELLO ACEITE	1					
27	2C0–16382–00	EJE DE PALANCA DE EMPUJE	1					

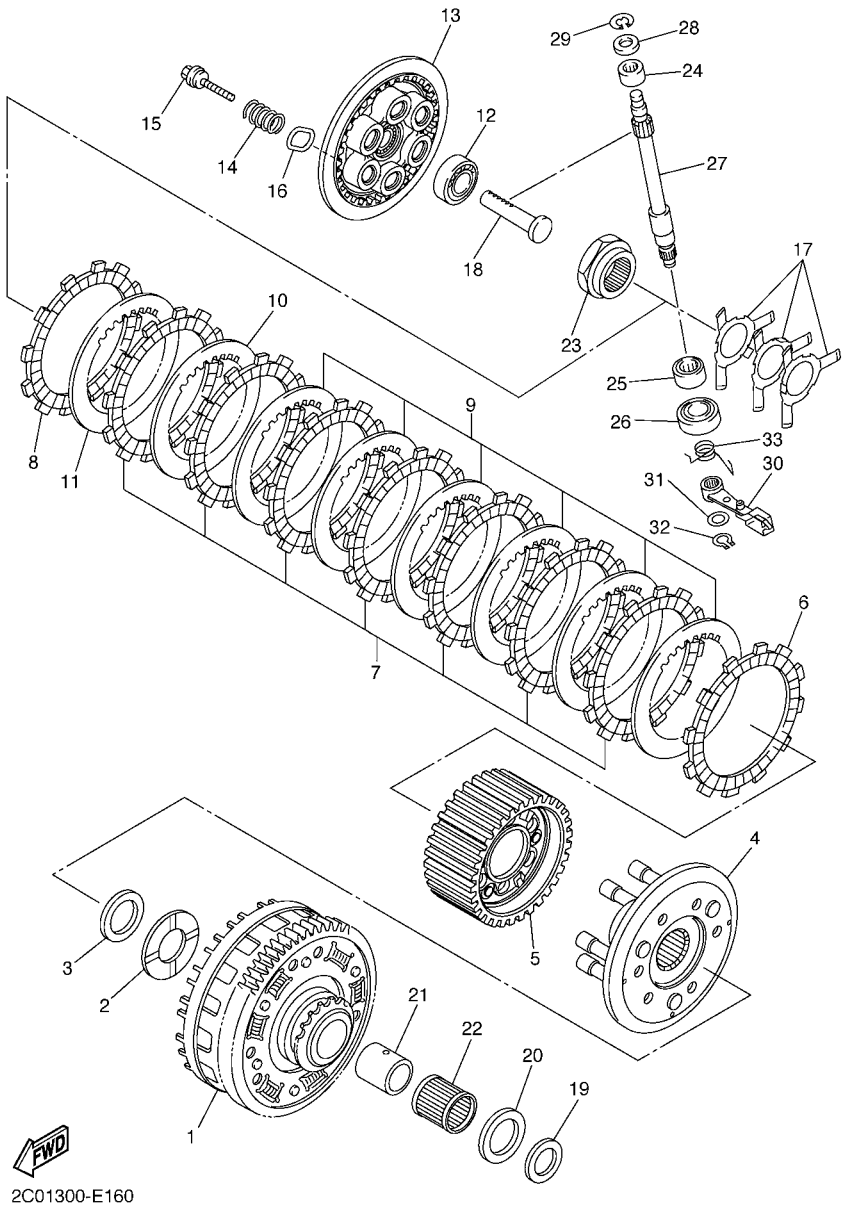

FIG. 16 EMBRAGUE

REF. Nº	CODIGO Nº	DESCRIPCION	2C01					OBSERVACIONES
28	92907–08600	ARANDELA	1					
29	99001–07600	PRESILLA REDONDA	1					
30	2C0–16340–00	PALANCA DE EMPUJE COMPLETA	1					
31	90201–10029	ARANDELA PLANA	1					
32	99009–10400	PRESILLA REDONDA	1					
33	90508–16052	RESORTE DE TORSION	1					

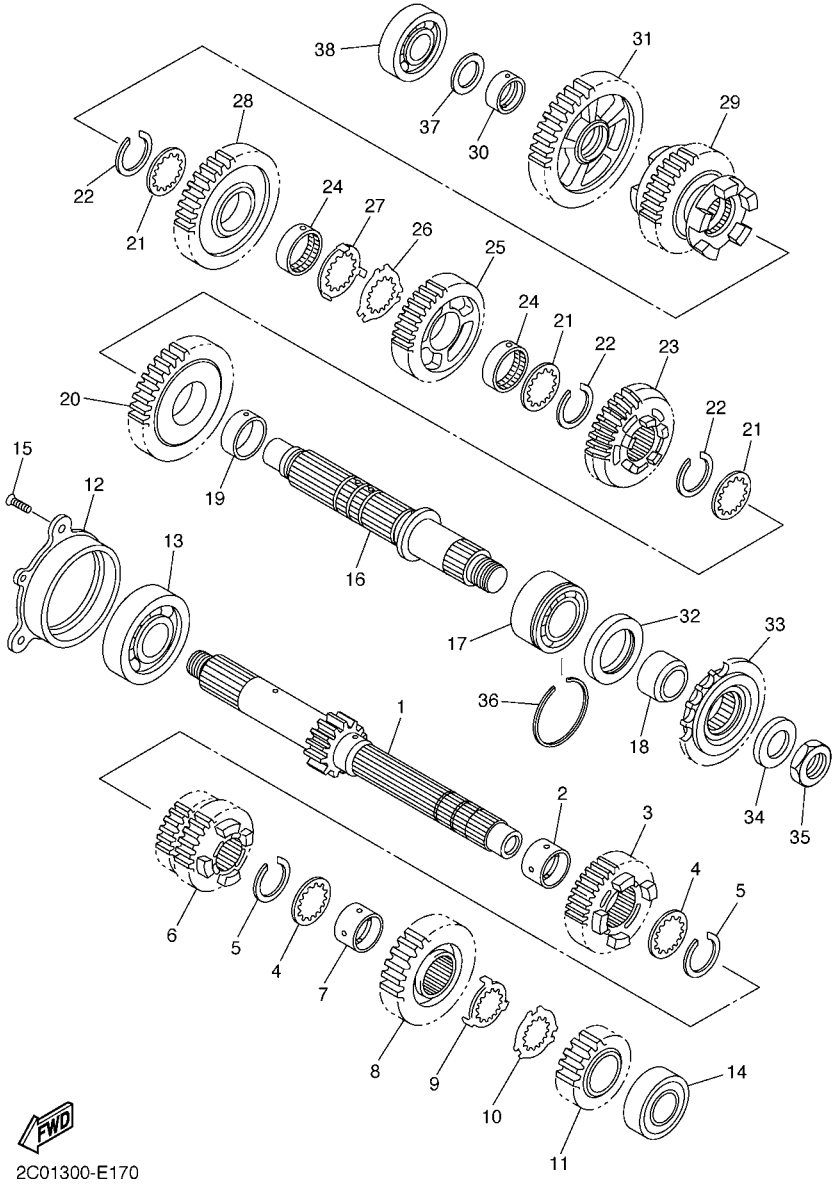

FIG. 17 TRANSMISION

REF. Nº	CODIGO Nº	DESCRIPCION	2C01					OBSERVACIONES
1	2C0–17411–00	EJE, PRINCIPAL (12T)	1					
2	90387–250R3	ESPACIADOR	1					
3	2C0–17151–00	ENGRANAJE PINON DE 5TA (21T)	1					
4	90209–21332	ARANDELA DE SEPARACION	2					
5	93440–25186	SEGURO	2					
6	2C0–17131–00	ENGRANAJE PINON DE 3RA(18/18T)	1					
7	90387–21003	ESPACIADOR	1					
8	2C0–17161–00	ENGRANAJE PINON 6TA (20T)	1					
9	90209–22352	ARANDELA DE SEPARACION	1					
10	90209–21351	ARANDELA DE SEPARACION	1					
11	2C0–17121–00	ENGRANAJE DE PINON DE 2DA(16T)	1					
12	2C0–15163–00	CAJA DE COJINETE 1	1					
13	93306–20562	COJINETE	1					
14	93306–20464	COJINETE	1					
15	90151–06024	TORNILLO EMBUTIDO	3					
16	2C0–17421–00	EJE SECUNDARIO	1					
17	93305–20509	COJINETE	1					
18	90387–25016	ESPACIADOR	1					
19	90387–28011	ESPACIADOR	1					
20	2C0–17221–00	ENGRANAJE RUEDA DE 2DA (32T)	1					
21	90209–25011	ARANDELA DE SEPARACION	3					
22	93440–28184	SEGURO	3					
23	2C0–17261–00	ENGRANAJE RUEDA DE 6TA (23T)	1					
24	90387–25015	ESPACIADOR	2					
25	2C0–17241–00	ENGRANAJE DE RUEDA 4TA (26T)	1					
26	90214–25004	ARANDELA DE POSICION	1					
27	90214–25003	ARANDELA DE POSICION	1					

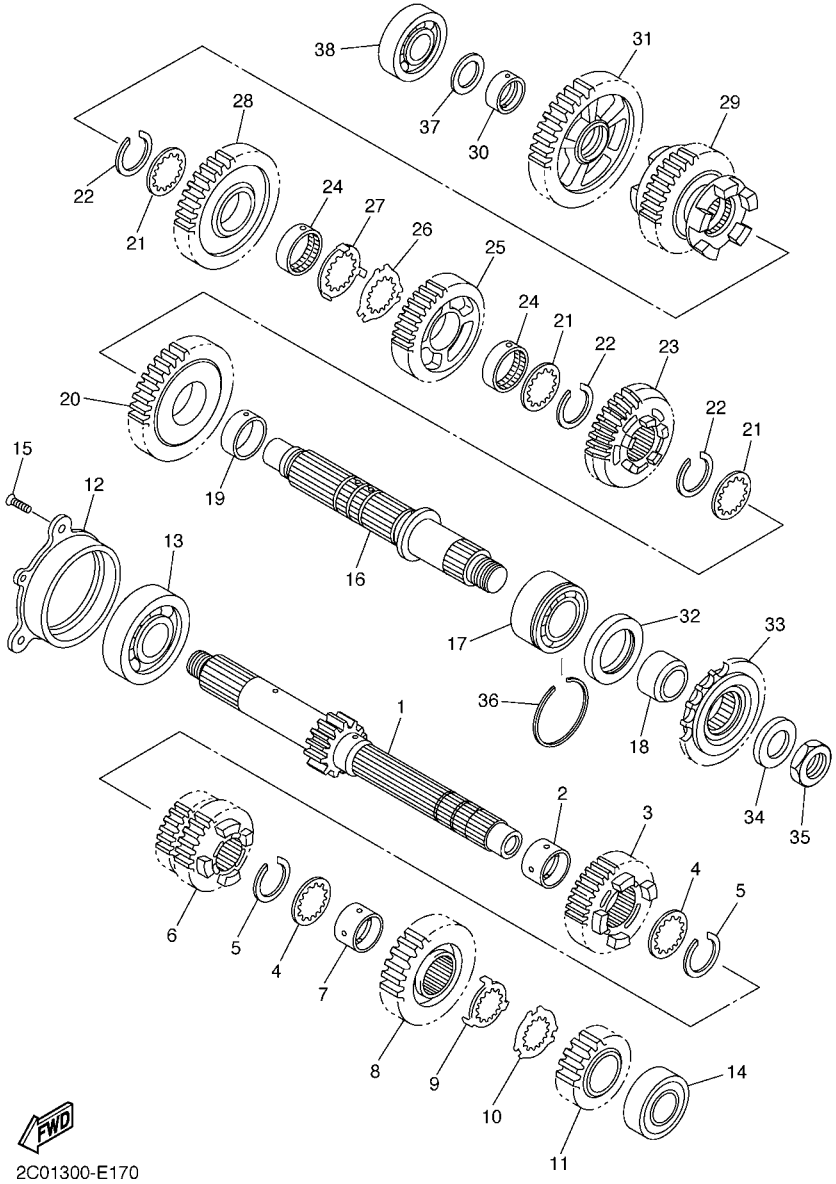

FIG. 17 TRANSMISION

REF. Nº	CODIGO Nº	DESCRIPCION	2C01					OBSERVACIONES
28	2C0–17231–00	ENGRANAJE RUEDA DE 3RA (30T)	1					
29	2C0–17251–00	ENGRANAJE RUEDA DE 5TA (27T)	1					
30	90387–21004	ESPACIADOR	1					
31	2C0–17211–00	ENGRANAJE RUEDA DE 1 RA (31T)	1					
32	93102–35017	SELLO ACEITE	1					
33	2C0–17460–00	RUEDA DENTADA (16T)	1					
34	90201–20023	ARANDELA PLANA	1					
35	90179–20011	TUERCA	1					
36	93440–52014	SEGURO	1					
37	90201–20278	ARANDELA PLANA	1					
38	93306–20464	COJINETE	1					

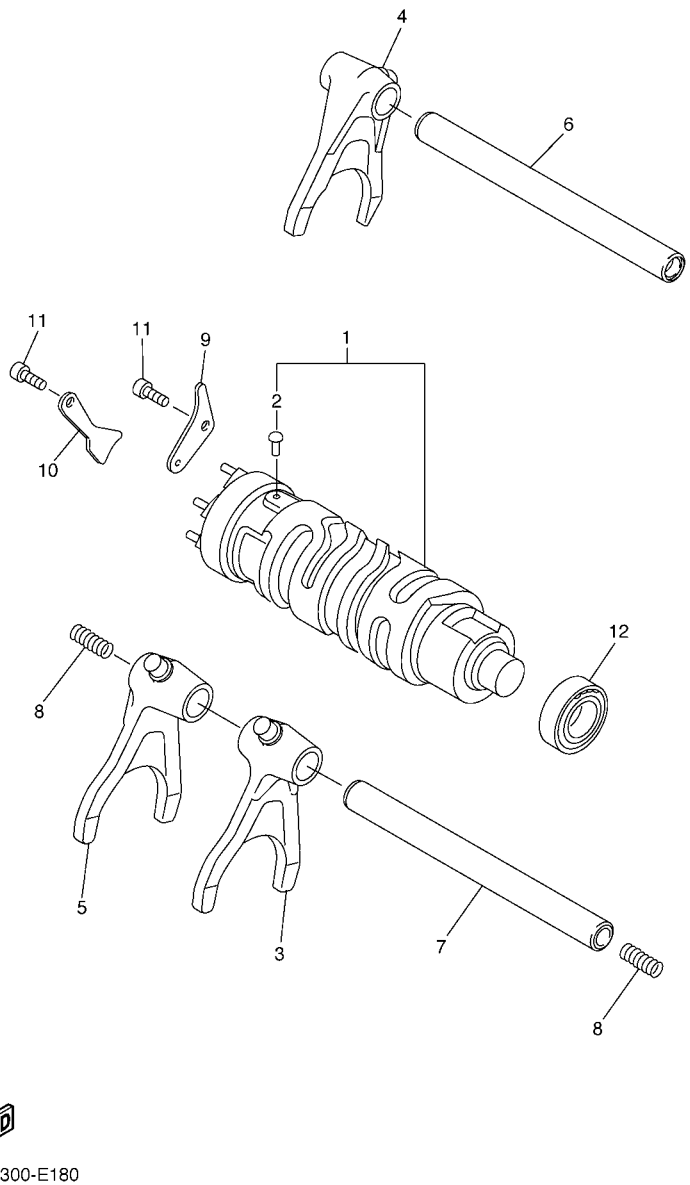

2C01300-E180

FIG. 18 LEVA DE CAMBIO & HORQUILLA

REF. Nº	CODIGO Nº	DESCRIPCION	2C01					OBSERVACIONES
1	2C0–18540–00	LEVA DEL CAMBIO COMPLETA	1					
2	136–18542–00	.PUNTO MUERTO	1					
3	2C0–18511–00	HORQUILLA DEL CAMBIO 1	1					
4	2C0–18512–00	HORQUILLA DEL CAMBIO 2	1					
5	2C0–18513–00	HORQUILLA DEL CAMBIO 3	1					
6	2C0–18531–00	BARRA GUIA HORQ. CAMBIO 1	1					
7	2C0–18535–00	BARRA GUIA HORQ .CAMBIO 2	1					
8	90501–080A2	RESORTE DE COMPRESION	2					
9	2C0–18536–00	TOPE DE PALANCA SELECTOR	1					
10	2C0–18562–00	PLACA DE TOPE 2	1					
11	90110–06182	TORNILLO ALLEN	2					
12	93306–00106	COJINETE	1					

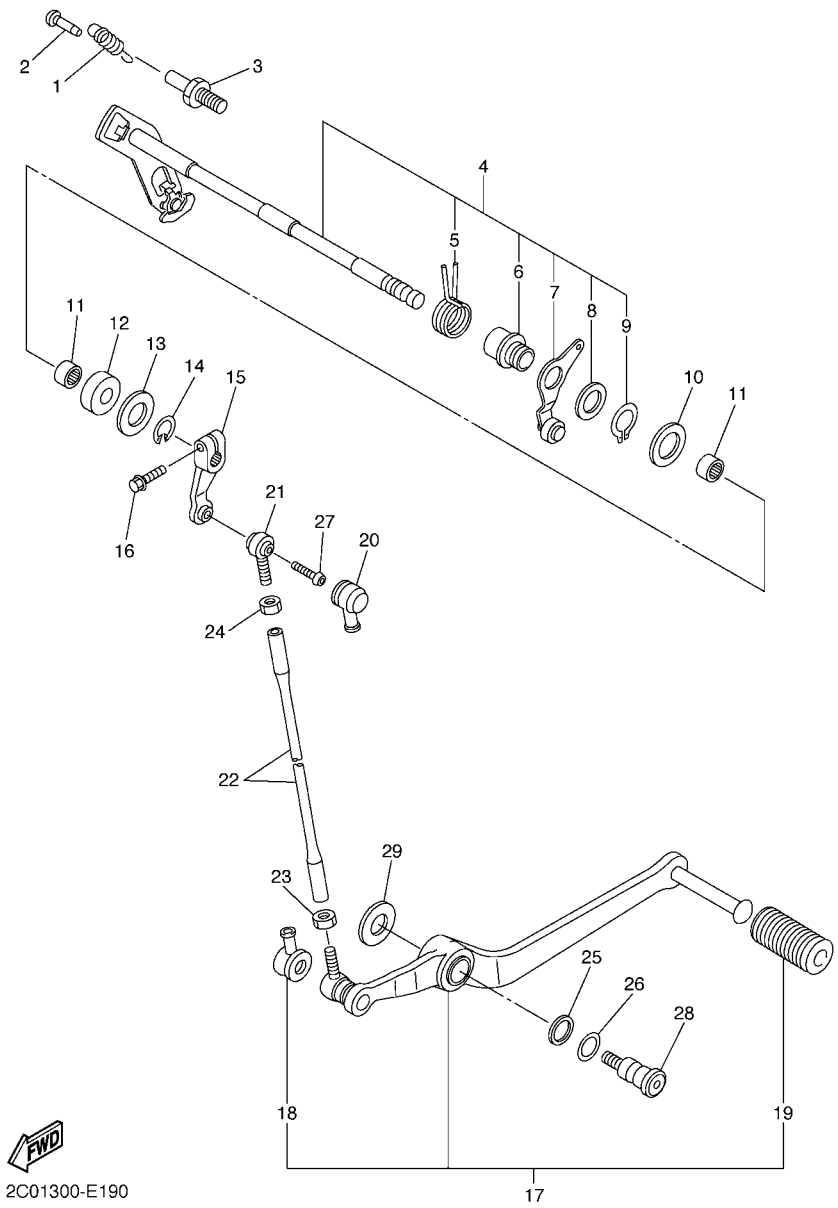

FIG. 19 EJE DE CAMBIO & PEDAL

REF. Nº	CODIGO Nº	DESCRIPCION	2C01					OBSERVACIONES
1	2C0–18144–00	GANCHO DE RESORTE	1					
2	132–16346–00	GANCHO DE RESORTE	1					
3	1D7–18127–00	PASADOR DE PALANCA	1					
4	2C0–18101–00	EJE SELECTOR COMPLETO	1					
5	90508–32020	.RESORTE DE TORSION	1					
6	2C0–18175–00	.ESPACIADOR	1					
7	2C0–18140–00	.PALANCA DE TOPE COMPLETA	1					
8	90201–177G4	.ARANDELA PLANA	1					
9	99009–17400	.PRESILLA REDONDA	1					
10	90201–127E1	ARANDELA PLANA	1					
11	93317–11295	COJINETE	2					
12	93101–12004	SELLO ACEITE	1					
13	90201–12575	ARANDELA PLANA	1					
14	99001–10600	PRESILLA REDONDA	1					
15	5PW–18112–00	BRAZO DEL CANBIO	1					
16	95822–06020	TORNILLO DE REBORDE	1					
17	2C0–18110–00	PEDAL DE CAMBIO COMPLETO	1					
18	2H9–18154–00	.CUBIERTA GUARDAPOLVO	1					
19	5EB–18113–00	.FUNDA DEL PEDAL DEL CAMBIO	1					
20	4XV–18154–00	CUBIERTA GUARDAPOLVO	1					
21	5LV–18116–00	VARILLA DE CONECTOR 1	1					
22	2C0–18115–00	VARILLA DEL CANBIO	1					
23	90170–08358	TUERCA	1					
24	95304–06700	TUERCA	1					
25	90201–12013	ARANDELA PLANA	1					
26	90206–12074	ARANDELA ONDULADA	1					
27	90111–06019	TORNILLO	1					

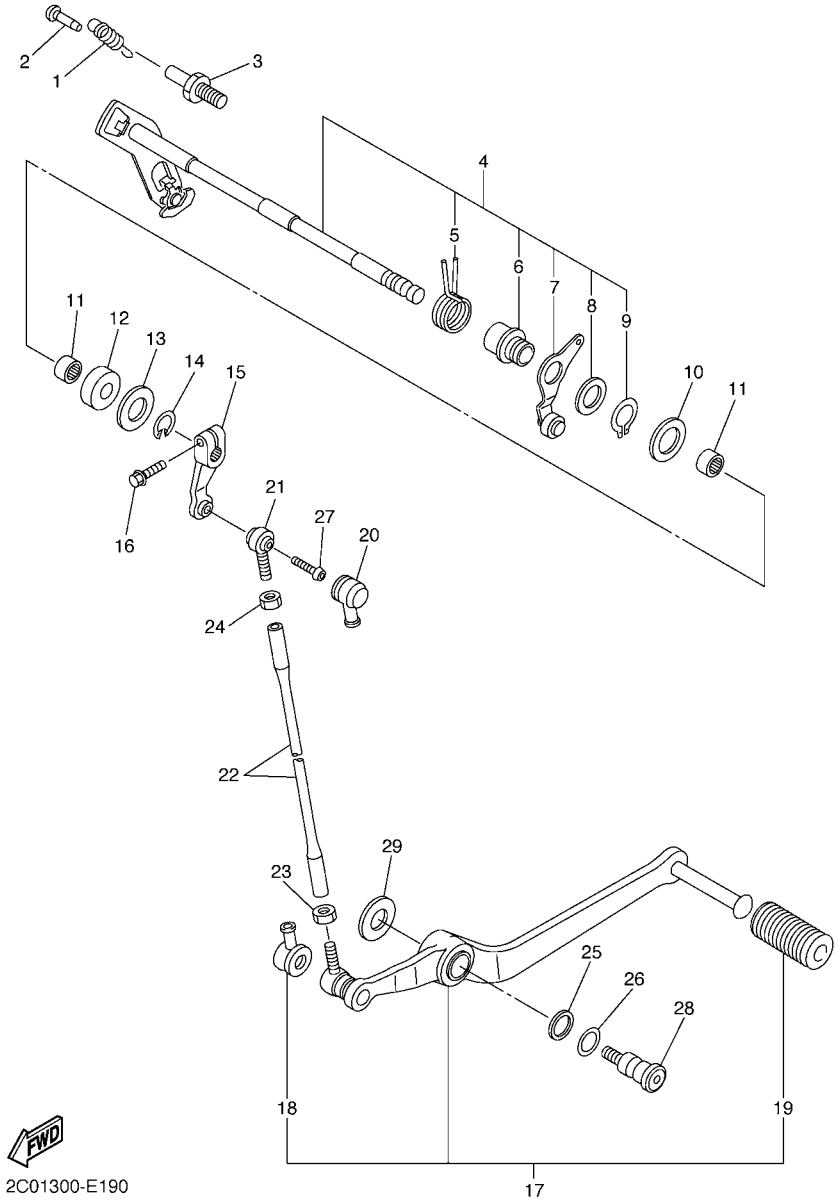

FIG. 19 EJE DE CAMBIO & PEDAL

REF. Nº	CODIGO Nº	DESCRIPCION	2C01					OBSERVACIONES
28	4BP–27434–01	PERNO	1					
29	90201–08326	ARANDELA PLANA	1					

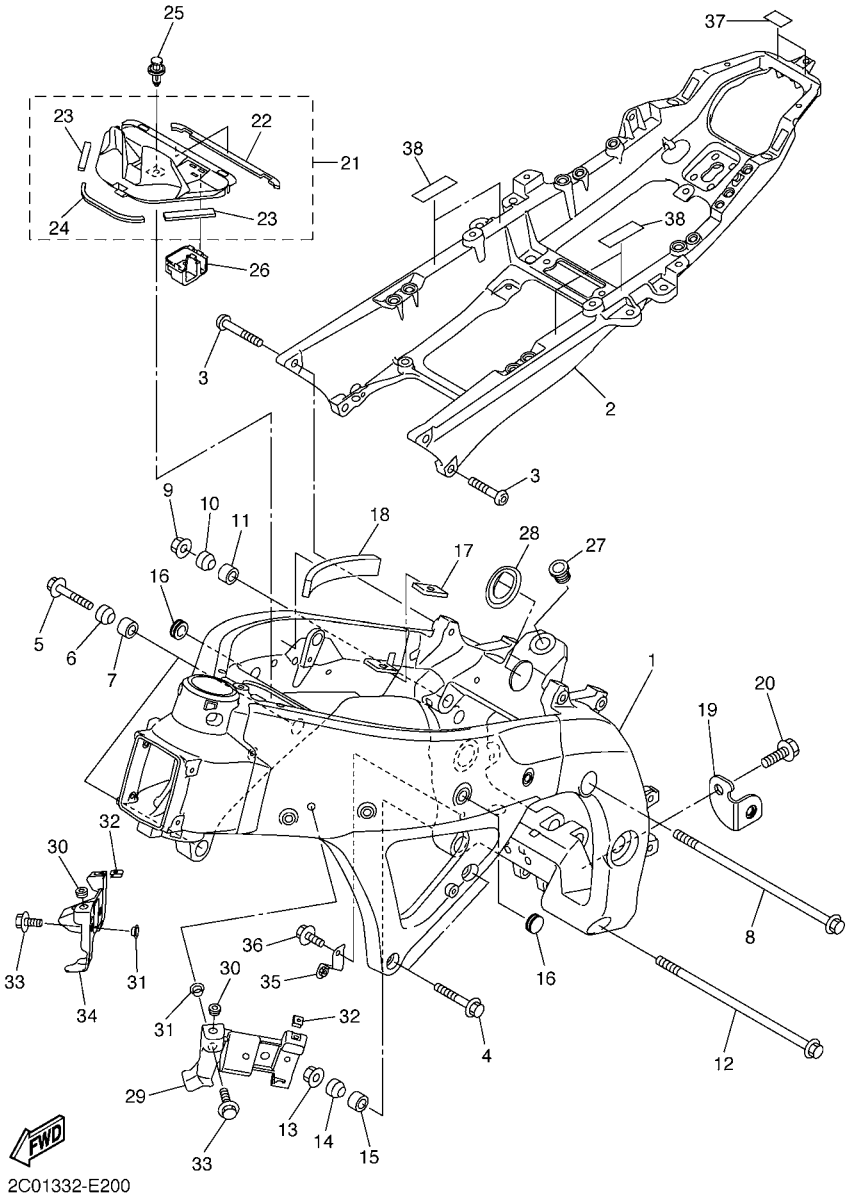

FIG. 20 CUADRO

REF. Nº	CODIGO Nº	DESCRIPCION	2C01					OBSERVACIONES
1	2C0–21110–00	ARMAZON COMPLETO	1					
2	2C0–21190–00	CUADRO TRASERO COMPLETA	1					
3	90149–10017	TORNILLO DE REGLAJE	4					
4	95024–10040	PERNO, DE BRIDA	2					
5	95024–10045	PERNO, DE BRIDA	2					
6	2C0–21414–00	COPA DE MONTANTE DE MOTOR	2					
7	5VY–21424–00	COPA DE MONTANTE DE MOTOR	2					
8	90105–12228	TORNILLO	1					
9	90179–12248	TUERCA	1					
10	2C0–21414–00	COPA DE MONTANTE DE MOTOR	1					
11	5VY–21424–00	COPA DE MONTANTE DE MOTOR	1					
12	90105–12228	TORNILLO	1					
13	90179–12248	TUERCA	1					
14	2C0–21414–00	COPA DE MONTANTE DE MOTOR	1					
15	5VY–21424–00	COPA DE MONTANTE DE MOTOR	1					
16	90338–15004	TAPON	2					
17	2C0–24182–00	AMORTIGUADOR DE MONTAJE 2	2					
18	2C0–21486–00	AMORTIGUADOR 2	2					
19	2C0–21435–00	SOPORTE DE SILENCIADOR	1					
20	90105–083A2	TORNILLO	1					
21	2C0–2110M–00	CUBIERTA COMPLETO 1	1					
22	2C0–2174X–00	.AMORTIGUADOR	1					
23	2C0–2174Y–00	.AMORTIGUADOR	2					
24	2C0–21746–00	.AMORTIGUADOR	1					
25	90269–07010	REMACHE	1					
26	2C0–8258J–00	CAJA DE CONECTOR 1	1					
27	2C0–22241–00	PERNO 1	1					

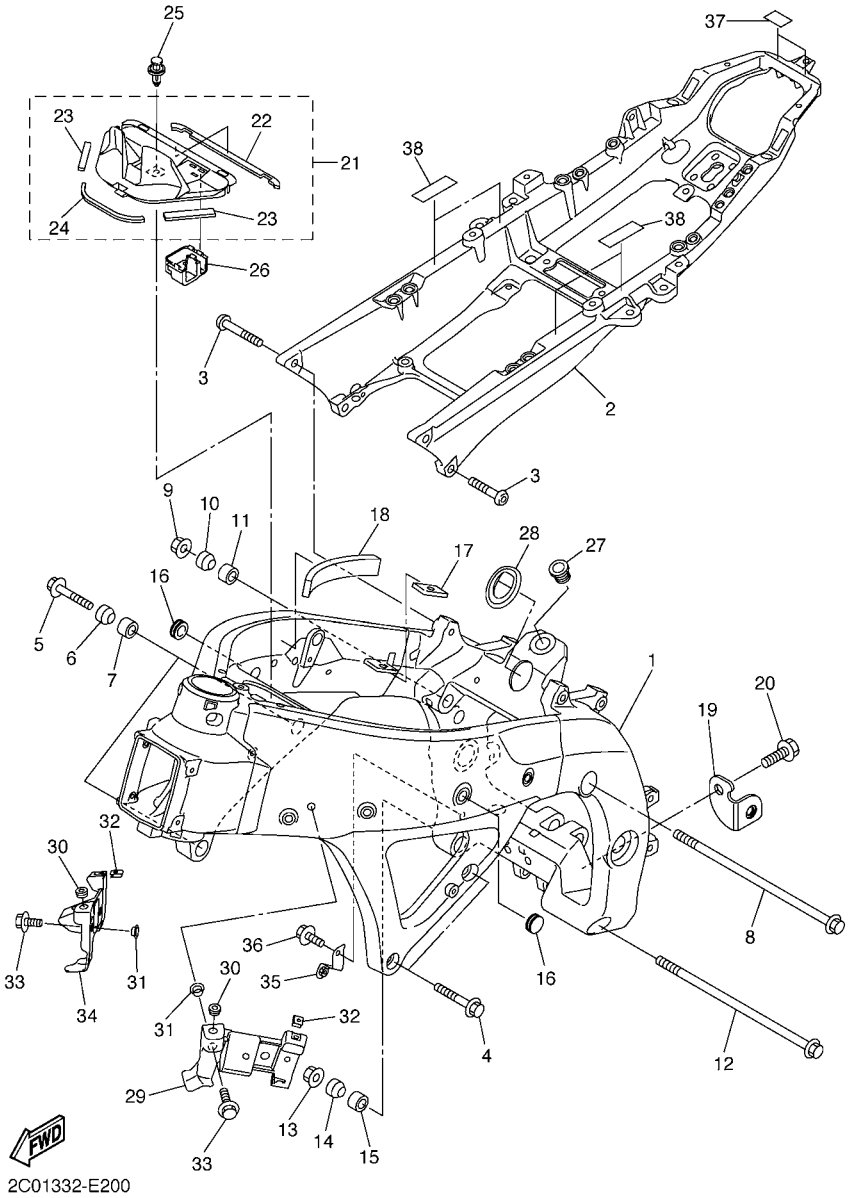

FIG. 20 CUADRO

REF. Nº	CODIGO Nº	DESCRIPCION	2C01					OBSERVACIONES
28	2C0–21279–00	TAPON CIEGO	1					
29	2C0–2833A–00	MENSULA7	1					
30	90480–10003	TAPON	2					
31	90387–06048	ESPACIADOR	4					
32	90183–05076	TUERCA DE RESORTE	2					
33	95807–06020	TUERCA DE REBORDE	4					
34	2C0–2833E–00	SOPORTE 8	1					
35	2C0–2836G–00	MENSULA 4	1					
36	90105–06020	TORNILLO	1					
37	2C0–21566–00	CINTA	2					
38	2C0–21567–00	CINTA	4					

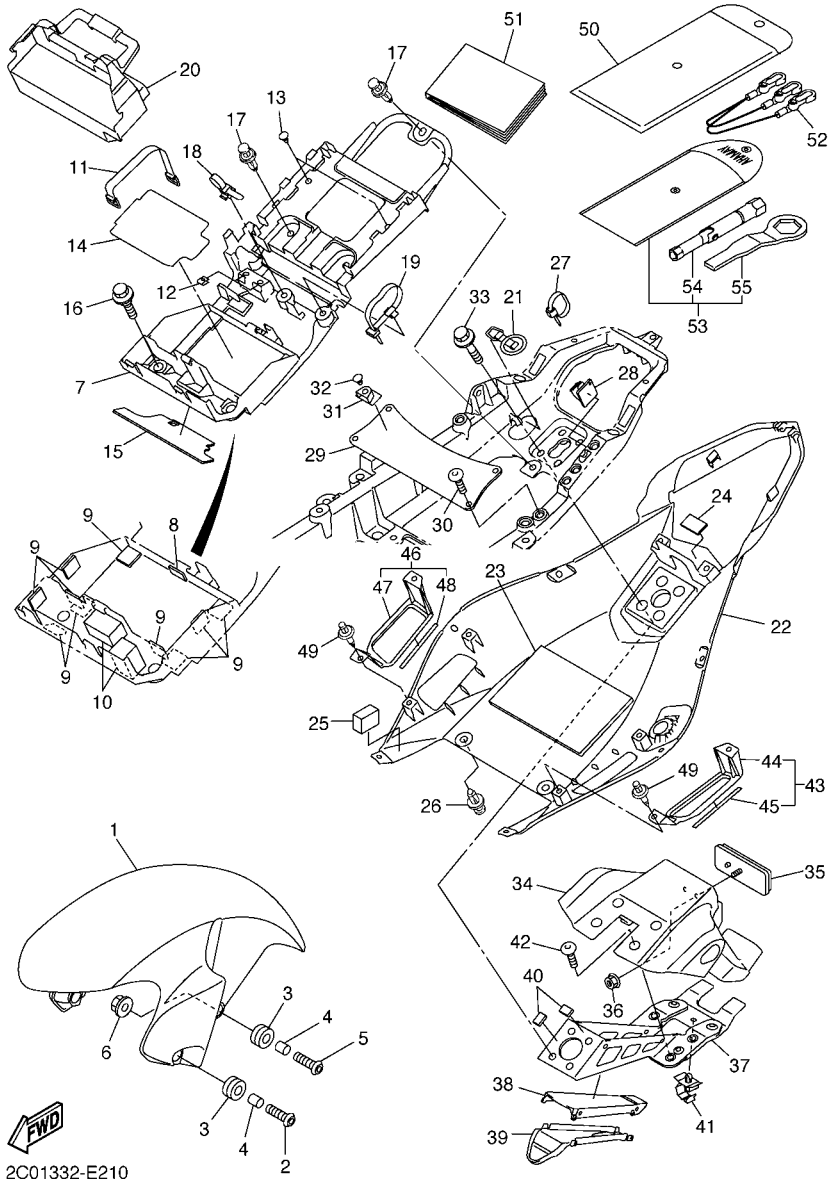

FIG. 21 GUARDABARRO

REF. Nº	CODIGO Nº	DESCRIPCION	2C01					OBSERVACIONES
1	2C0–21511–00–P0	GUARDABARRO DELANTERO	1					UR DPBMC
	2C0–21511–00–P1	GUARDABARRO DELANTERO	1					UR VRC1 PARA BWC1
	2C0–21511–00–P2	GUARDABARRO DELANTERO	1					UR SMX
2	90111–06043	TORNILLO	2					
3	90480–14003	TAPON	4					
4	90387–06057	ESPACIADOR	4					
5	90111–06030	TORNILLO	2					
6	95707–06500	TUERCA DE BRIDA	2					
7	2C0–8212B–00	CAJA DE BATERIA	1					
8	51Y–21639–00	AMORTIGUADOR 2	1					
9	2C0–21649–00	AMORTIGUADOR	10					
10	2C0–21541–00	AMORTIGUADOR 1	2					
11	133–82131–00	TIRANTE DE BATERIA	1					
12	90183–04039	TUERCA DE RESORTE	2					
13	90338–06018	TAPON	2					
14	2C0–821A1–00	ASIENTO	1					
15	2C0–821A2–00	ASIENTO	1					
16	90109–06171	PERNO	2					
17	90269–07010	REMACHE	3					
18	90464–12089	BRIDA	1					
19	90464–44002	BRIDA	1					
20	2C0–82160–00	CUBIERTA COMPLETO	1					
21	2C0–21376–00	BANDA DE HERRAMIENTA	1					
22	2C0–21611–00–P0	GUARDABARRO TRASERO	1					UR DPBMC
	2C0–21611–00–P1	GUARDABARRO TRASERO	1					UR BWC1
	2C0–21611–00–P2	GUARDABARRO TRASERO	1					UR SMX
23	2C0–21639–00	AMORTIGUADOR 2	1					

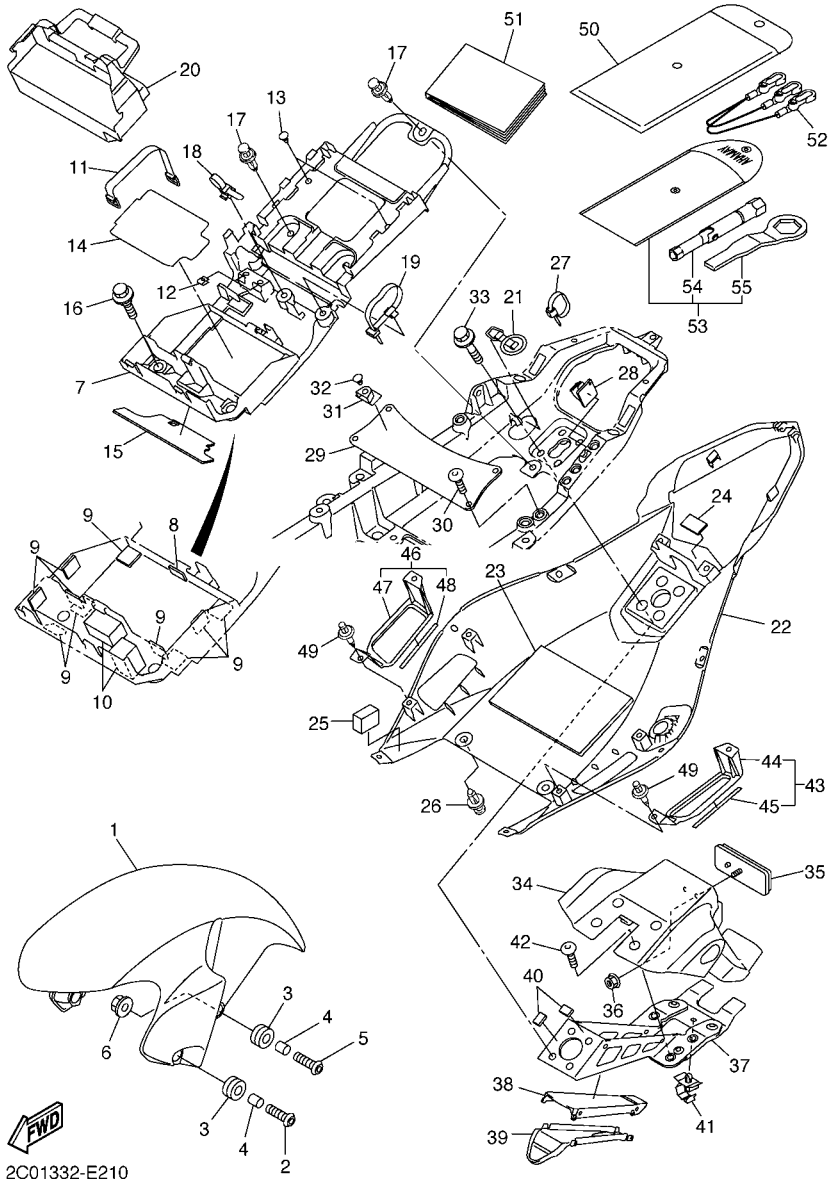

FIG. 21 GUARDABARRO

REF. Nº	CODIGO Nº	DESCRIPCION	2C01					OBSERVACIONES
24	5GM–27445–00	PLACE 1	1					
25	2C0–2162G–00	PLACA 1	2					
26	90269–07010	REMACHE	2					
27	90464–13073	BRIDA	1					
28	90464–13004	BRIDA	2					
29	2C0–21131–00	SOPORTE	1					
30	92017–06016	PERNO	4					
31	5SL–2172E–00	SOPORTE,CUBIERTA LATERAL 1	2					
32	90338–06018	TAPON	2					
33	90119–06138	TORNILLO CON ARANDELA	4					
34	2C0–21629–00	GUARDABARRO INFERIOR	1					
35	3Y6–85130–02	REFLECTOR TRASERO COMPLETO	1					
36	95607–05200	TUERCA DE AUTO-CIERRE	1					
37	2C0–21640–00	SOPORTE TRASERO COMPLETO	1					
38	2C0–2163A–00	CUBIERTA TRAS GUARDABARRO 1	1					
39	2C0–2163E–00	CUBIERTA TRAS GUARDABARRO 2	1					
40	2C0–21669–00	SELLO	4					
41	90464–14228	BRIDA	1					
42	90109–06182	PERNO	4					
43	2C0–22250–00–P0	CUBIERTA COMPLETO	1					UR DPBMC
	2C0–22250–00–P1	CUBIERTA COMPLETO	1					UR BWC1
	2C0–22250–00–P2	CUBIERTA COMPLETO	1					UR SMX
44	2C0–2177E–00–P0	.TAPA	1					UR DPBMC
	2C0–2177E–00–P1	.TAPA	1					UR BWC1
	2C0–2177E–00–P2	.TAPA	1					UR SMX
45	2C0–2173T–00	.CINTA 1	2					
46	2C0–22290–00–P0	CUBIERTA COMPLETO	1					UR DPBMC

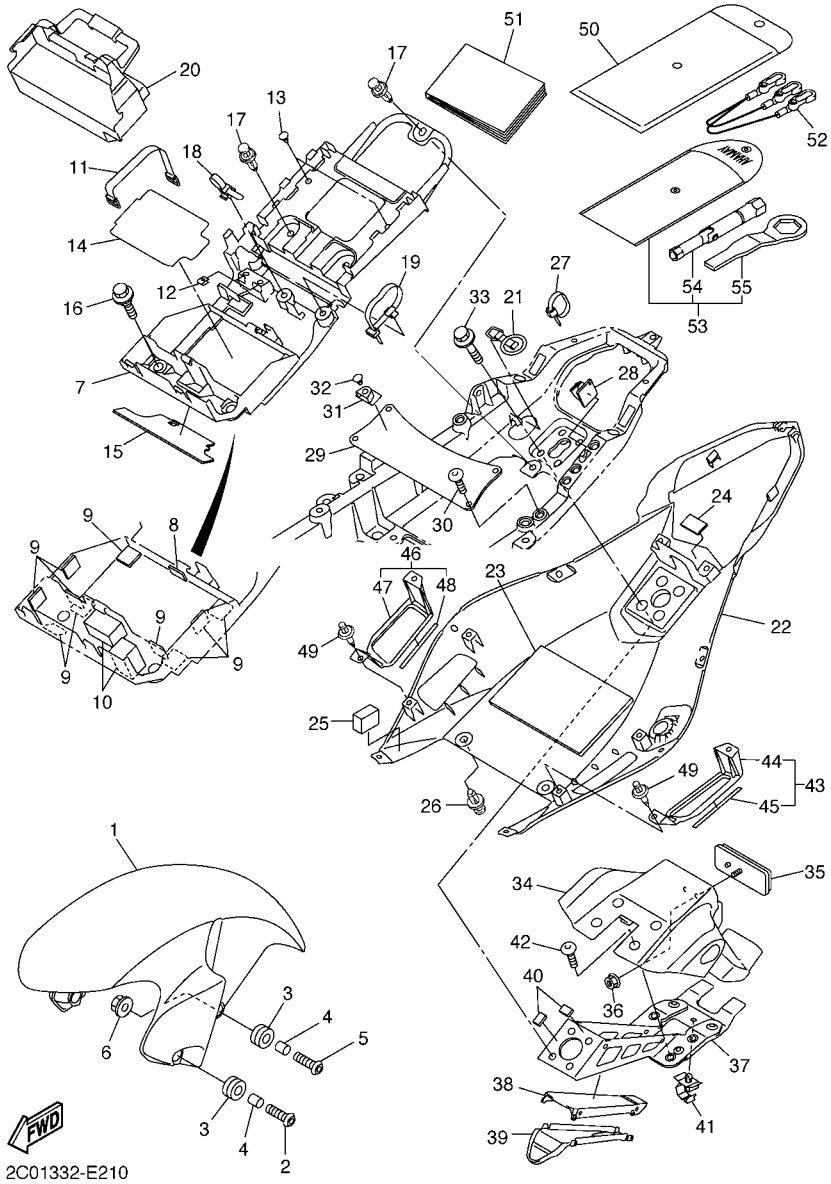

FIG. 21 GUARDABARRO

REF. Nº	CODIGO Nº	DESCRIPCION	2C01					OBSERVACIONES
46	2C0–22290–00–P1	CUBIERTA COMPLETO	1					UR BWC1
	2C0–22290–00–P2	CUBIERTA COMPLETO	1					UR SMX
47	2C0–2177J–00–P0	.TAPA 2	1					UR DPBMC
	2C0–2177J–00–P1	.TAPA 2	1					UR BWC1
	2C0–2177J–00–P2	.TAPA 2	1					UR SMX
48	2C0–2173T–00	.CINTA 1	2					
49	90269–06001	REMACHE	4					
50	2C0–28100–00	JUEGO DE HERRAMIENTAS	1					
51	2C0–28199–S0	MANUAL DEL PROPIETARIO	1					
52	2C0–21370–00	PORTACASCO COMPLETO	1					
53	2C0–28110–00	JUEGO DE HERRAMIENTAS, 2	1					
54	4XV–2814F–00	.CAJA	1					
55	4FM–28135–00	.LLAVE DE TUERCAS	1					

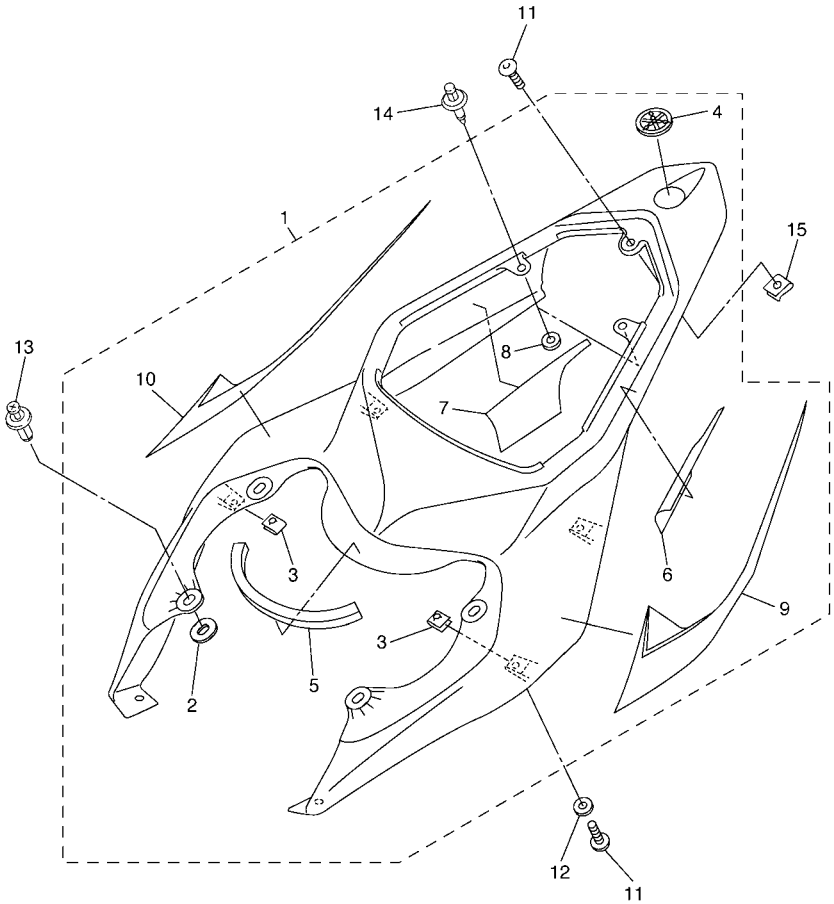

2C01300-E220

FIG. 22 CUBIERTA LATERAL

REF. Nº	CODIGO Nº	DESCRIPCION	2C01					OBSERVACIONES
1	2C0–Y2171–00–P0	CUBIERTA, LATERAL 1	1					UR DPBMC
	2C0–Y2171–10–P1	CUBIERTA, LATERAL 1	1					UR BWC1
	2C0–21710–00–P2	CUBIERTA LATERAL COMPLETA 1	1					UR SMX
2	5PW–2174X–00	.AMORTIGUADOR	4					
3	90183–05076	.TUERCA DE RESORTE	4					
4	4KN–2836B–00	.MARCA	1					
5	2C0–21747–00	.AMORTIGUADOR	1					
6	2C0–2172P–00	.ASIENTO	1					
7	2C0–2173P–00	.ASIENTO	1					
8	5SL–84753–00	.AMORTIGUADOR	2					
9	2C0–2173E–00	.GRAFICO 1	1					UR PARA DPBMC
	2C0–2173E–10	.GRAFICO 1	1					UR PARA BWC1
10	2C0–2173F–00	.GRAFICO 2	1					UR PARA DPBMC
	2C0–2173F–10	.GRAFICO 2	1					UR PARA BWC1
11	90111–05003	TORNILLO	5					
12	90202–05180	ARANDELA DE PLANA	4					
13	90269–07076	REMACHE	4					
14	90269–06001	REMACHE	4					
15	90183–05076	TUERCA DE RESORTE	1					

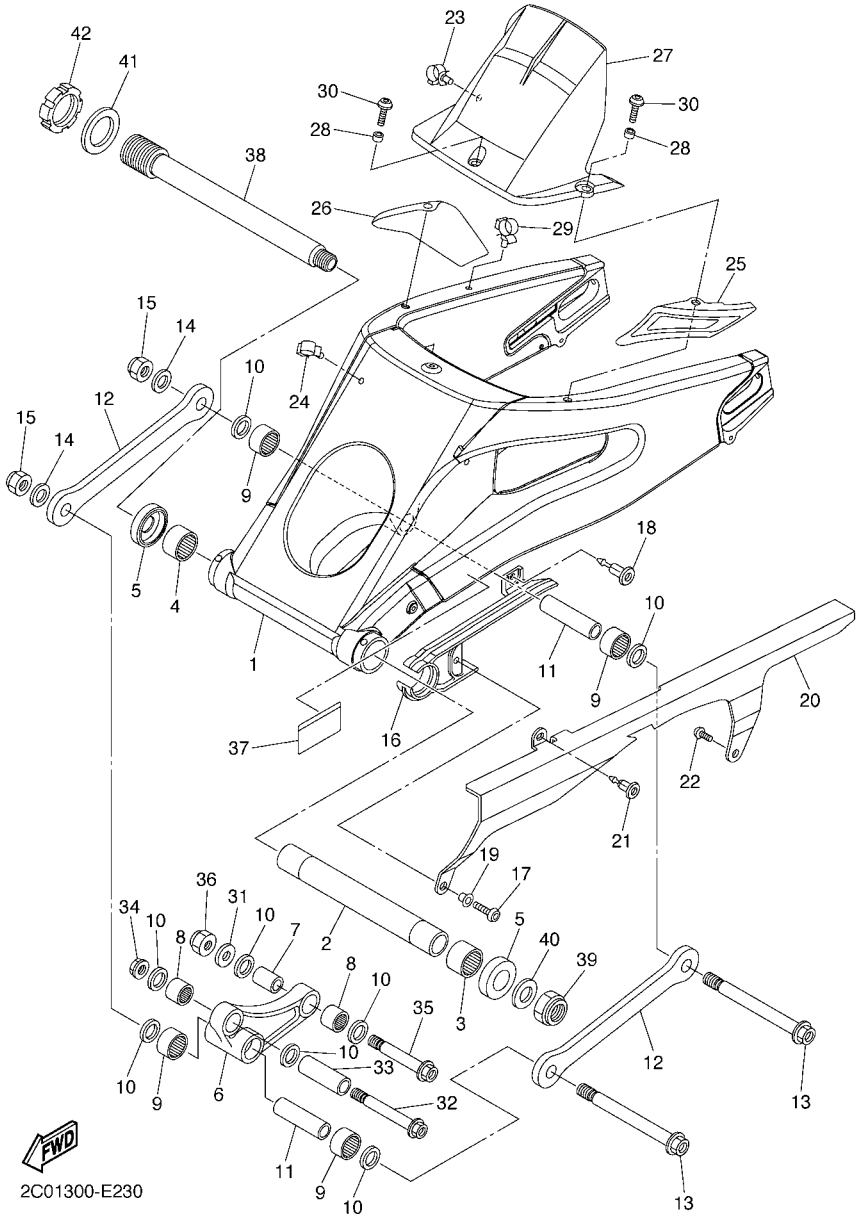

FIG. 23 BRAZO TRASERO

REF. Nº	CODIGO Nº	DESCRIPCION	2C01					OBSERVACIONES
1	2C0–22110–00	BRAZO TRASERO COMPLETO	1					
2	2C0–22184–00	BUJE	1					
3	93317–330A0	COJINETE	1					
4	93317–330A1	COJINETE	1					
5	2C0–22128–00	TAPA DE EMPIJE 1	2					
6	2C0–2217A–00	BRAZO REEURIO	1					
7	90387–127W0	ESPACIADOR	1					
8	93315–31759	COJINETE DE RODILLOS	2					
9	93315–31758	COJINETE DE RODILLOS	4					
10	93109–17071	SELLO ACEITE	8					
11	90387–126Y1	ESPACIADOR	2					
12	2C0–2217M–00	BRAZO 1	2					
13	90109–12010	PERNO	2					
14	92907–12600	ARANDELA	2					
15	90185–12119	TUERCA AUTOBLOCANTE	2					
16	2C0–22151–00	SELLO DE GUARDA	1					
17	92017–06016	PERNO	1					
18	90269–07008	REMACHE	1					
19	90387–062X0	ESPACIADOR	1					
20	2C0–22311–00	CABRECADENA	1					
21	90269–07007	REMACHE	1					
22	90110–06102	TORNILLO ALLEN	1					
23	90464–16012	BRIDA	1					
24	90464–16011	BRIDA	1					
25	2C0–228A0–00	CUBIERTA COMPLETO 1	1					
26	2C0–228B0–00	CUBIERTA COMPLETO 2	1					
27	2C0–21650–00	GUARDABARRO TRANSERO COMP.	1					

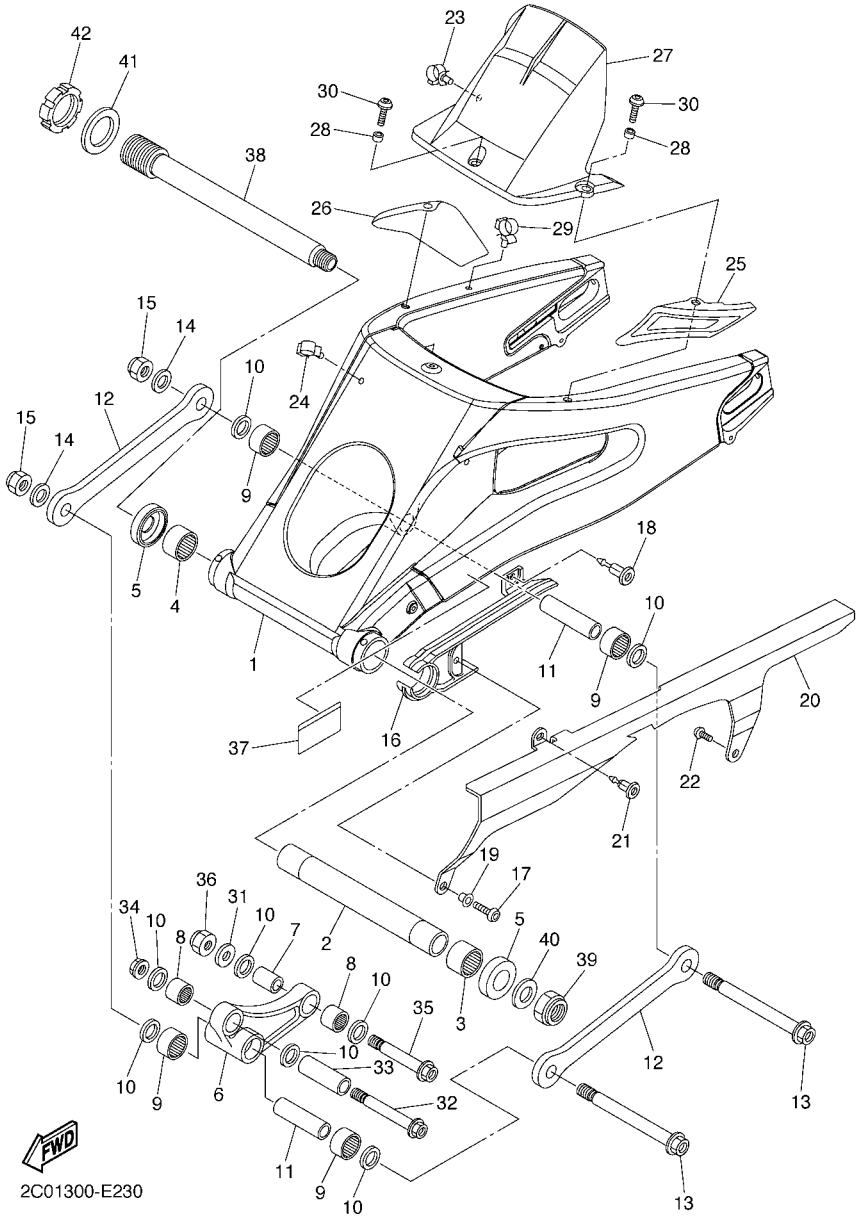

FIG. 23 BRAZO TRASERO

REF. Nº	CODIGO Nº	DESCRIPCION	2C01					OBSERVACIONES
28	90387–06022	ESPACIADOR	3					
29	90464–16012	BRIDA	1					
30	90111–06038	TORNILLO	3					
31	92907–12600	ARANDELA	1					
32	90109–10017	PERNO	1					
33	90387–1012B	ESPACIADOR	1					
34	95607–10200	TUERCA DE AUTO-CIERRE	1					
35	90109–12011	PERNO	1					
36	90185–12119	TUERCA AUTOBLOCANTE	1					
37	5JW–21668–00	ETIQUETA DE FRANJA	1					
38	2C0–22141–00	EJE DEL BARCULANTE	1					
39	90185–22002	TUERCA AUTOBLOCANTE	1					
40	90201–22014	ARANDELA PLANA	1					
41	90201–33014	ARANDELA PLANA	1					
42	2C0–22252–00	TUERCA	1					

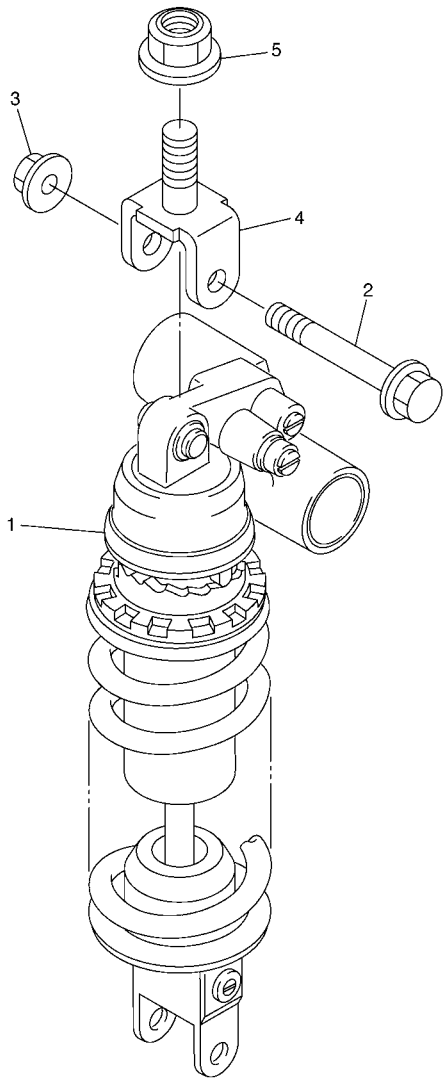

2C01300-E240

FIG. 24 SUSPENSION TRASERO

REF. Nº	CODIGO Nº	DESCRIPCION	2C01					OBSERVACIONES
1	2C0–22210–00	AMORTIGUADOR TRASERO COMPLETO	1					
2	90105–10017	TORNILLO	1					
3	95607–10200	TUERCA DE AUTO-CIERRE	1					
4	5SL–22219–00	SOPORTE SUPERIOR	1					
5	95607–14200	TUERCA DE AUTO-CIERRE	1					

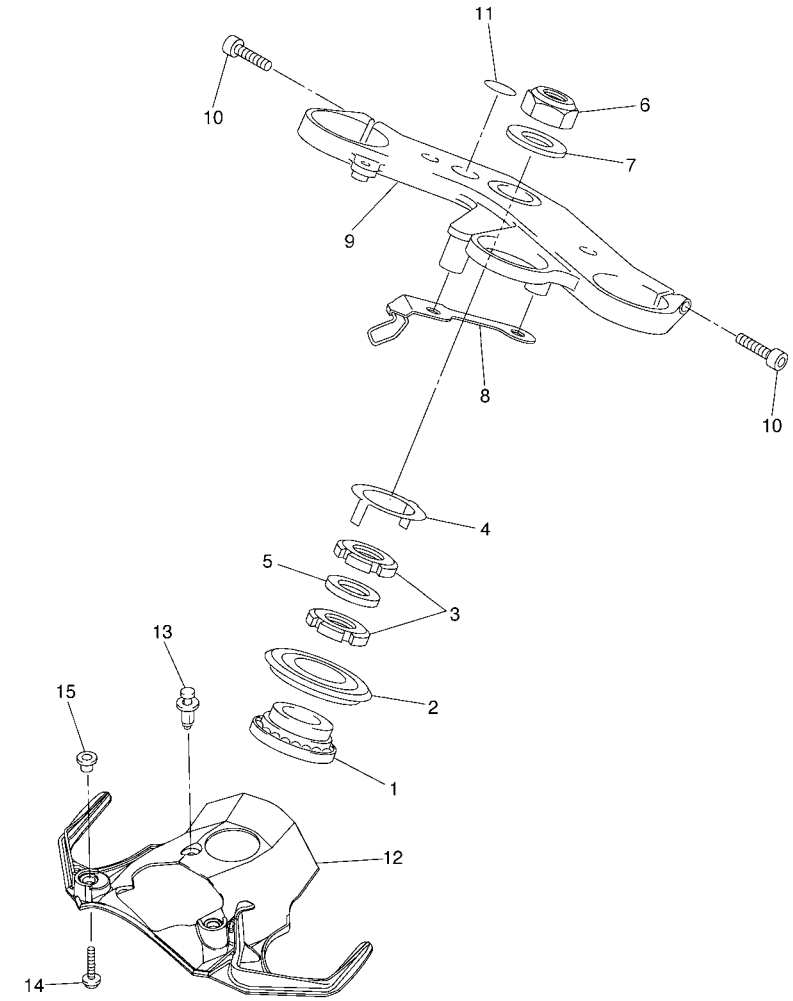

2C01300-E250

FIG. 25 DIRECCION

REF. Nº	CODIGO Nº	DESCRIPCION	2C01					OBSERVACIONES
1	93399–99932	COJINETE	1					
2	4XV–23415–01	CUBIERTA DE PISTA DE BOLAS 1	1					
3	90179–30691	TUERCA	2					
4	4XV–23418–00	ARANDELA ESPECIAL	1					
5	90202–30235	ARANDELA DE PLANA	1					
6	90170–28419	TUERCA	1					
7	90201–281U8	ARANDELA PLANA	1					
8	2C0–23389–00	GUIA DE CABLE	1					
9	2C0–23435–00	PLATINA SUPERIOR	1					
10	91314–08030	PERNO	2					
11	4XV–2341B–00	EMBLEMA	1					
12	2C0–23818–00	CUBIERTA DE DIRECCION	1					
13	90269–06081	REMACHE	1					
14	90111–06038	TORNILLO	2					
15	90387–0611K	ESPACIADOR	2					

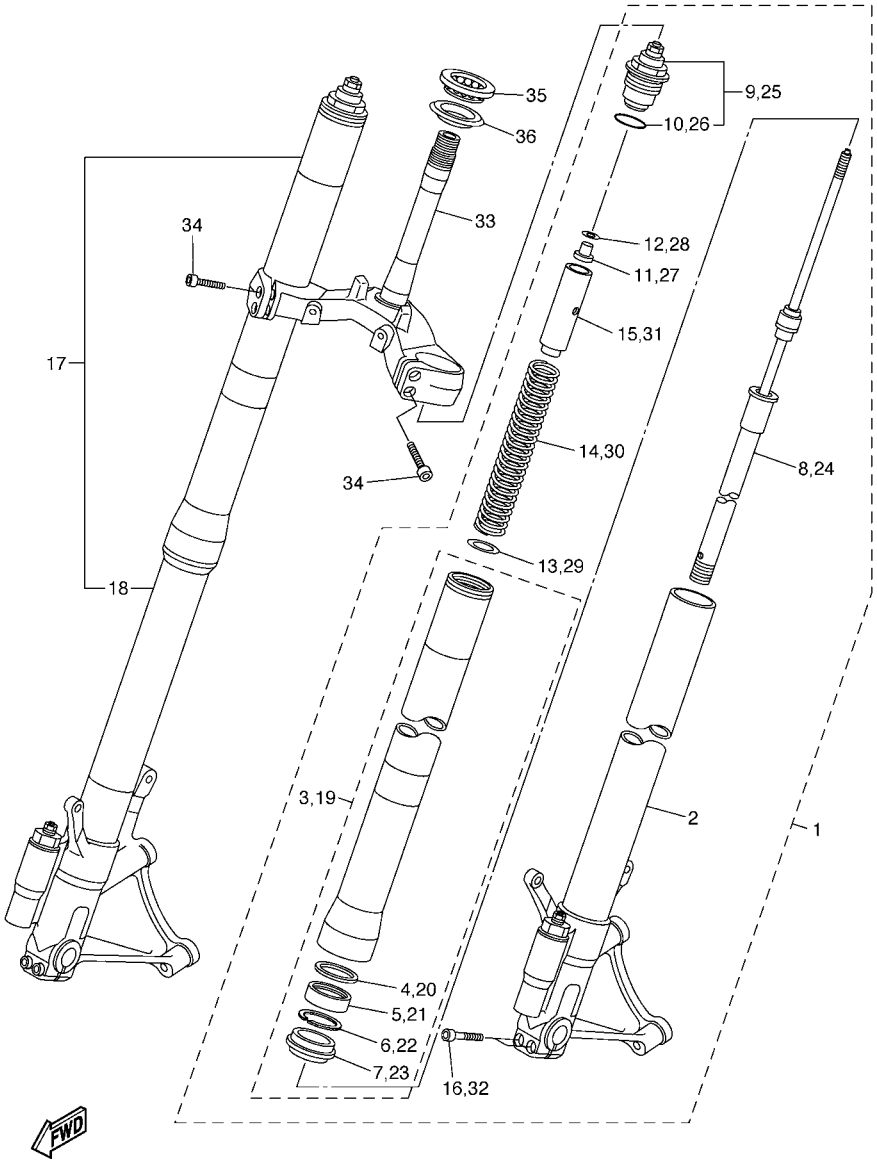

2C01300-E260

FIG. 26 HORQUILLA DELANTERA

REF. Nº	CODIGO Nº	DESCRIPCION	2C01					OBSERVACIONES
1	2C0–23102–00	HORQUILLA DELANTERA COMPL.(MI)	1					PARA DPBMC,BWC1
	2C0–23102–10	HORQUILLA DELANTERA COMPL.(MI)	1					PARA SMX
2	2C0–23110–00	.TUBO INTERIOR COMPLETO 1	1					
3	2C0–23106–00	.TUBO EXTERIOR COMPLETO (MI)	1					PARA DPBMC,BWC1
	2C0–23106–10	.TUBO EXTERIOR COMPLETO (MI)	1					PARA SMX
4	3VD–23115–00	..GUIA DE CUBIERTA SUPERIOR	1					
5	5VU–23145–00	..RETEN DE ACEITE	1					
6	3VD–23156–00	..PRESILLA DEL RETEN DE ACEITE	1					
7	3VD–23144–00	..GUARDAPOLVO	1					
8	2C0–23170–00	.CILINDRO COMPL DE HORQ DELAN	1					
9	2C0–23111–00	.TAPON	1					
10	93210–41N50	..ANILLO O	1					
11	5YU–23393–00	.TUERCA ESPECIAL	1					
12	5YU–2332N–00	.PLACA DE VALVULA 2	1					
13	2C0–23143–00	.ASIENTO DE RESORTE INFERIOR	1					
14	2C0–23141–00	.RESORTE HORQUILLA DELANT.	1					
15	2C0–2331L–00	.ASIENTO DEL MUELLE SUPERIOR	1					
16	91314–08040	.PERNO	2					
17	2C0–23103–00	HORQUILLA DELANTERA COMPL.(MD)	1					PARA DPBMC,BWC1
	2C0–23103–10	HORQUILLA DELANTERA COMPL.(MD)	1					PARA SMX
18	2C0–23120–00	.TUBO INTERIOR COMPLETO 2	1					
19	2C0–23106–00	.TUBO EXTERIOR COMPLETO (MI)	1					PARA DPBMC,BWC1
	2C0–23106–10	.TUBO EXTERIOR COMPLETO (MI)	1					PARA SMX
20	3VD–23115–00	..GUIA DE CUBIERTA SUPERIOR	1					
21	5VU–23145–00	..RETEN DE ACEITE	1					
22	3VD–23156–00	..PRESILLA DEL RETEN DE ACEITE	1					
23	3VD–23144–00	..GUARDAPOLVO	1					

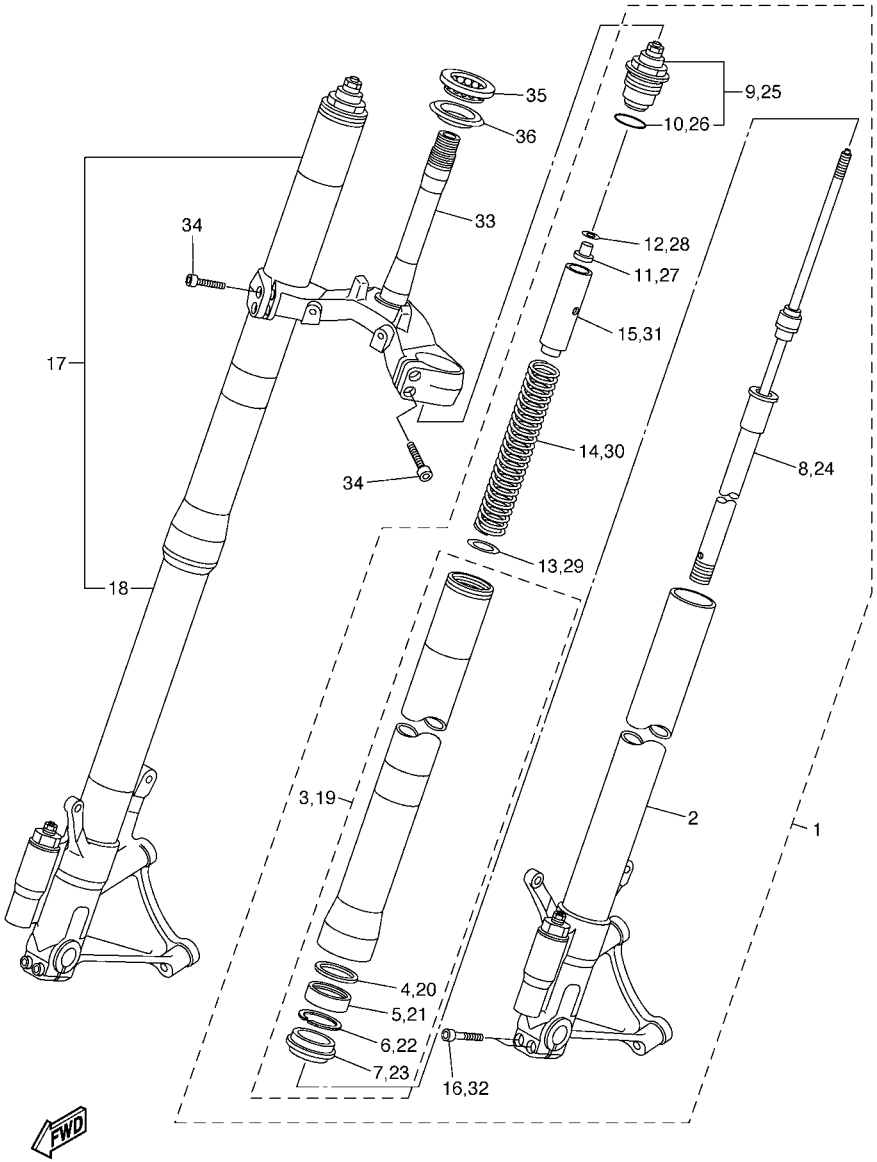

FIG. 26 HORQUILLA DELANTERA

REF. Nº	CODIGO Nº	DESCRIPCION	2C01					OBSERVACIONES
24	2C0–23170–00	.CILINDRO COMPL DE HORQ DELAN	1					
25	2C0–23111–00	.TAPON	1					
26	93210–41N50	..ANILLO O	1					
27	5YU–23393–00	.TUERCA ESPECIAL	1					
28	5YU–2332N–00	.PLACA DE VALVULA 2	1					
29	2C0–23143–00	.ASIENTO DE RESORTE INFERIOR	1					
30	2C0–23141–00	.RESORTE HORQUILLA DELANT.	1					
31	2C0–2331L–00	.ASIENTO DEL MUELLE SUPERIOR	1					
32	91314–08040	.PERNO	2					
33	2C0–23340–00	PLATINA INFERIOR COMPLETA	1					
34	91314–08030	PERNO	4					
35	93399–99957	COJINETE	1					
36	3FV–23462–00	RETEN DE DIRECCION	1					

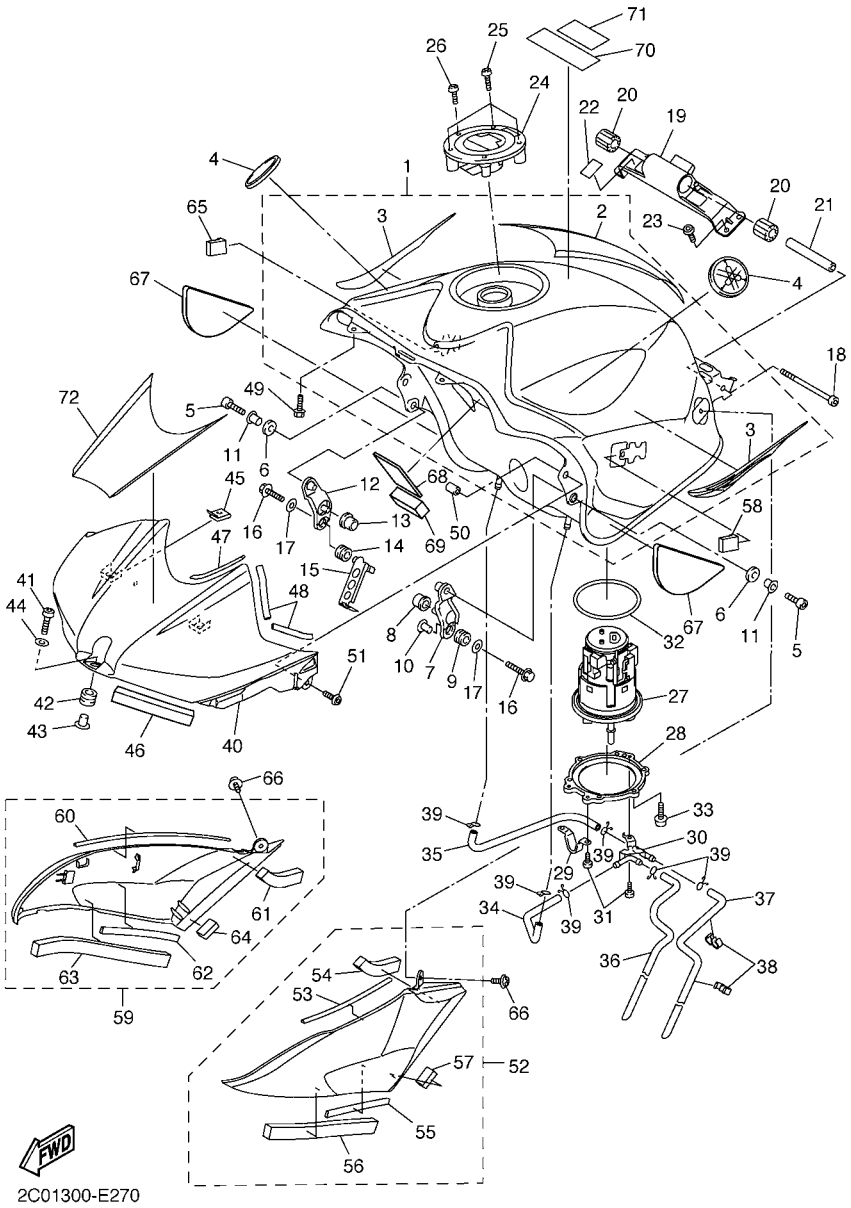

FIG. 27 DEPOSITO DE COMBUSTIBLE

REF. Nº	CODIGO Nº	DESCRIPCION	2C01					OBSERVACIONES
1	2C0–YK241–00–P0	DEPOSITO DE COMBUSTIBLE COMP.	1					UR DPBMC
	2C0–Y2410–00–01	DEPOSITO DE COMBUSTIBLE COMP.	1					UR BWC1
	2C0–Y2410–00–02	DEPOSITO DE COMBUSTIBLE COMP.	1					UR SMX
2	2C0–24245–00	.CALCOMANIA DEPOSITO COMBUST.	1					PARA BWC1
3	2C0–24240–00	.JUEGO DE CALCOMANIAS	1					PARA SMX
4	5SL–2413B–00	EMBLEMA	2					
5	91317–06016	PERNO	2					
6	5VY–24183–00	AMORTIGUADOR DE MONTAJE 3	2					
7	5VY–24191–00	SOPORTE DEPOSITO DE COMBUST.1	1					
8	5VY–24181–00	AMORTIGUADOR DE MONTAJE 1	1					
9	90480–10542	TAPON	1					
10	90387–066Y6	ESPACIADOR	1					
11	90387–06143	ESPACIADOR	2					
12	5VY–24192–00	SOPORTE DE DEPOSITO COMBUST.2	1					
13	5VY–24181–00	AMORTIGUADOR DE MONTAJE 1	1					
14	90480–10542	TAPON	1					
15	2C0–21339–00	GUIA DE CABLE	1					
16	95027–06030	PERNO, DE BRIDA	2					
17	90201–06063	ARANDELA PLANA	2					
18	91317–06090	PERNO	1					
19	2C0–2413Y–00	SOPORTE ACCESORIO DE DEPOSITO	1					
20	5SL–24183–00	AMORTIGUADOR DE MONTAJE 3	2					
21	90387–06055	ESPACIADOR	1					
22	2C0–21566–00	CINTA	2					
23	90111–06038	TORNILLO	4					
24	5JJ–24602–00	TAPON COMPLETO	1					
25	90110–05112	TORNILLO ALLEN	3					

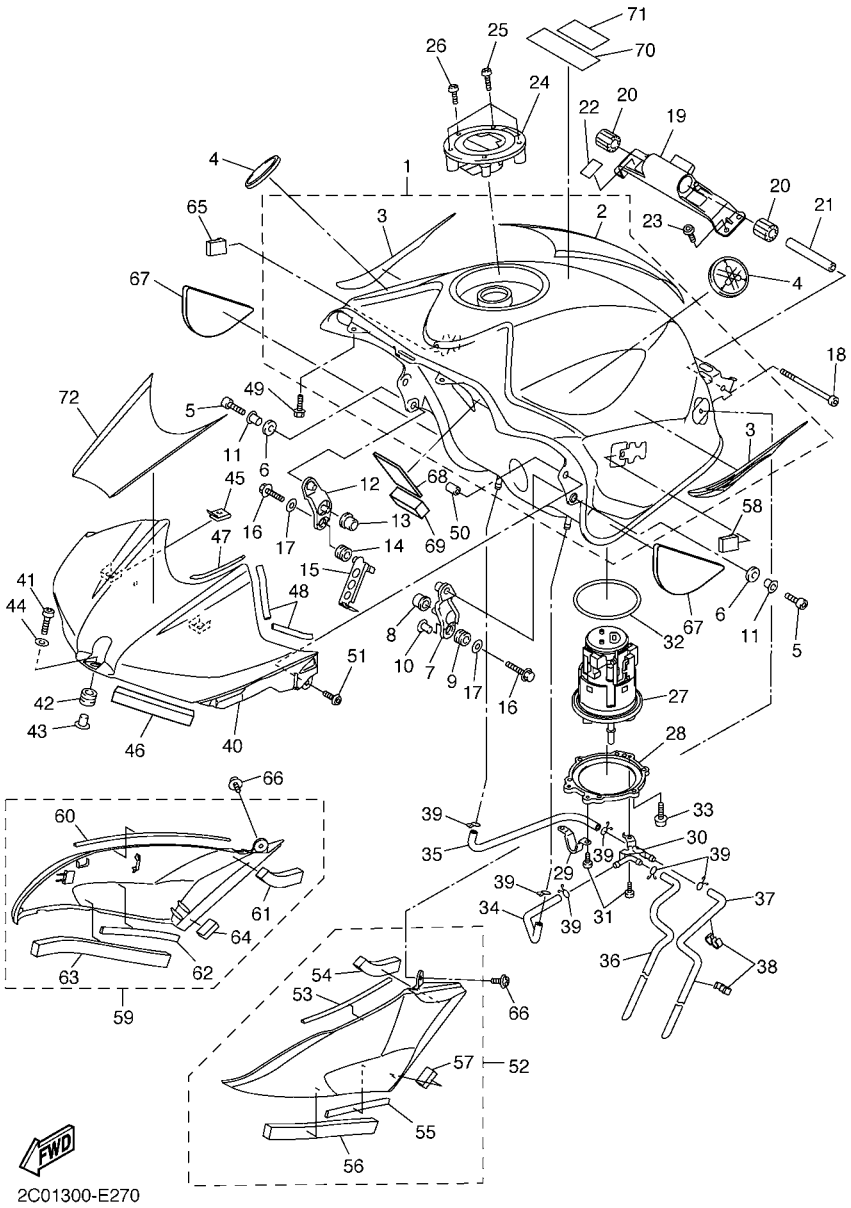

FIG. 27 DEPOSITO DE COMBUSTIBLE

REF. Nº	CODIGO Nº	DESCRIPCION	2C01					OBSERVACIONES
26	91317–05010	PERNO	1					
27	2C0–13907–00	BOMBA DE COMBUSTIBLE COMPLETA	1					
28	2C0–24491–00	SOPORTE BOMBA COMBUSTIBLE	1					
29	5PW–24192–00	SOPORTE DE DEPOSITO COMBUST.2	1					
30	2C0–24135–00	GRAMPA 1	1					
31	90154–05012	TORNILLO DE LIGAR	3					
32	5JW–24486–00	ANILLO O	1					
33	90110–05014	TORNILLO ALLEN	6					
34	2C0–24315–00	TUBO DE DESAGUE	1					
35	2C0–24316–00	TUBO 6	1					
36	2C0–24317–00	TUBO 7	1					
37	2C0–24313–00	TUBO 3	1					
38	90464–09M31	BRIDA	2					
39	90467–09006	PRESILLA	6					
40	2C0–2171A–00–P0	CUBIERTA, TECHO	1					UR DPBMC
	2C0–2171A–00–P1	CUBIERTA, TECHO	1					UR BWC1
	2C0–2171A–00–P2	CUBIERTA, TECHO	1					UR MBL2 PARA SMX
41	91314–06025	PERNO	1					
42	90480–12314	TAPON	1					
43	90387–065J6	ESPACIADOR	1					
44	90201–06M30	ARANDELA PLANA	1					
45	90183–05074	TUERCA DE RESORTE	2					
46	2C0–2414J–00	EQUILIBRIO, CUBIERTA	2					
47	2C0–2414K–00	EQUILIBRIO, CUBIERTA 3	2					
48	2C0–2414N–00	EQUILIBRIO, CUBIERTA	4					
49	90105–05002	TORNILLO	2					
50	90179–05523	TUERCA	2					

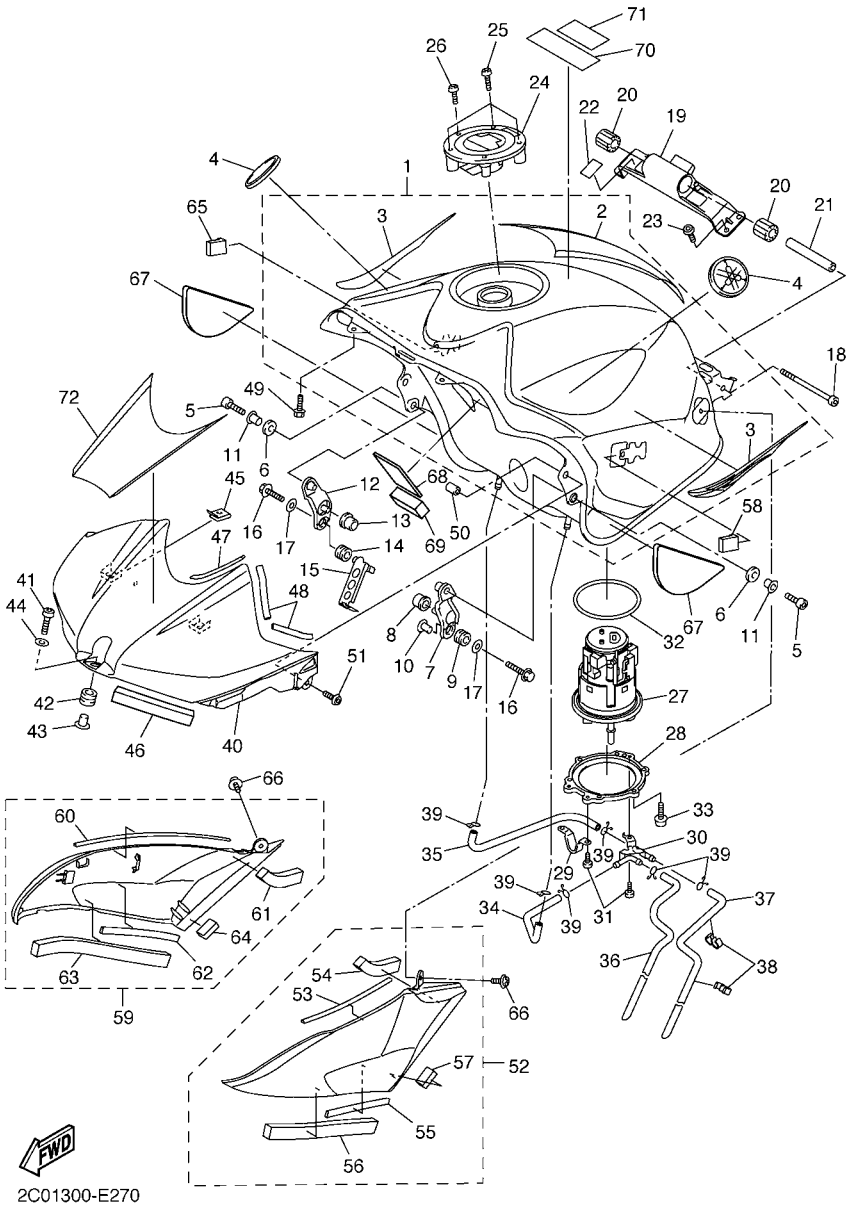

FIG. 27 DEPOSITO DE COMBUSTIBLE

REF. Nº	CODIGO Nº	DESCRIPCION	2C01					OBSERVACIONES
51	98907–05014	TORNILLO DE LIGAR	2					
52	2C0–24106–00	CUBIERTA LATERAL COMPLETA 1	1					
53	2C0–2414H–00	.EQUILIBRIO, CUBIERTA	1					
54	2C0–2414P–00	.EQUILIBRIO, CUBIERTA	1					
55	5PW–2414J–00	.EQUILIBRIO, CUBIERTA	1					
56	2C0–24184–00	.AMORTIGUADOR DE MONTAJE 4	1					
57	2C0–2414R–00	.EQUILIBRIO, CUBIERTA	1					
58	5PW–2411J–01	AMORTIGUADOR, DE CUBIERTA LAT	1					
59	2C0–24108–00	CUBIERTA LATERAL COMPLETA 2	1					
60	2C0–2414H–00	.EQUILIBRIO, CUBIERTA	1					
61	2C0–2414P–00	.EQUILIBRIO, CUBIERTA	1					
62	5PW–2414J–00	.EQUILIBRIO, CUBIERTA	1					
63	2C0–24184–00	.AMORTIGUADOR DE MONTAJE 4	1					
64	2C0–2414R–00	.EQUILIBRIO, CUBIERTA	1					
65	5PW–2411J–01	AMORTIGUADOR, DE CUBIERTA LAT	1					
66	90159–05015	TORNILLO CON VALONA	2					
67	2C0–24145–00	AMORTIGUADOR CUBIERTA LATERAL	2					
68	5EJ–2414H–00	EQUILIBRIO, CUBIERTA	1					
69	5JX–21732–00	SELLO 1	1					
70	5PA–21568–00	ETIQUETA DE PRECAUCION	1					
71	5PW–2415E–01	EMBLEMA DE PRECAUCTON	1					
72	2C0–24244–00	CALCOMANIA DEPOSITO COMBUST.1	1					PARA BWC1

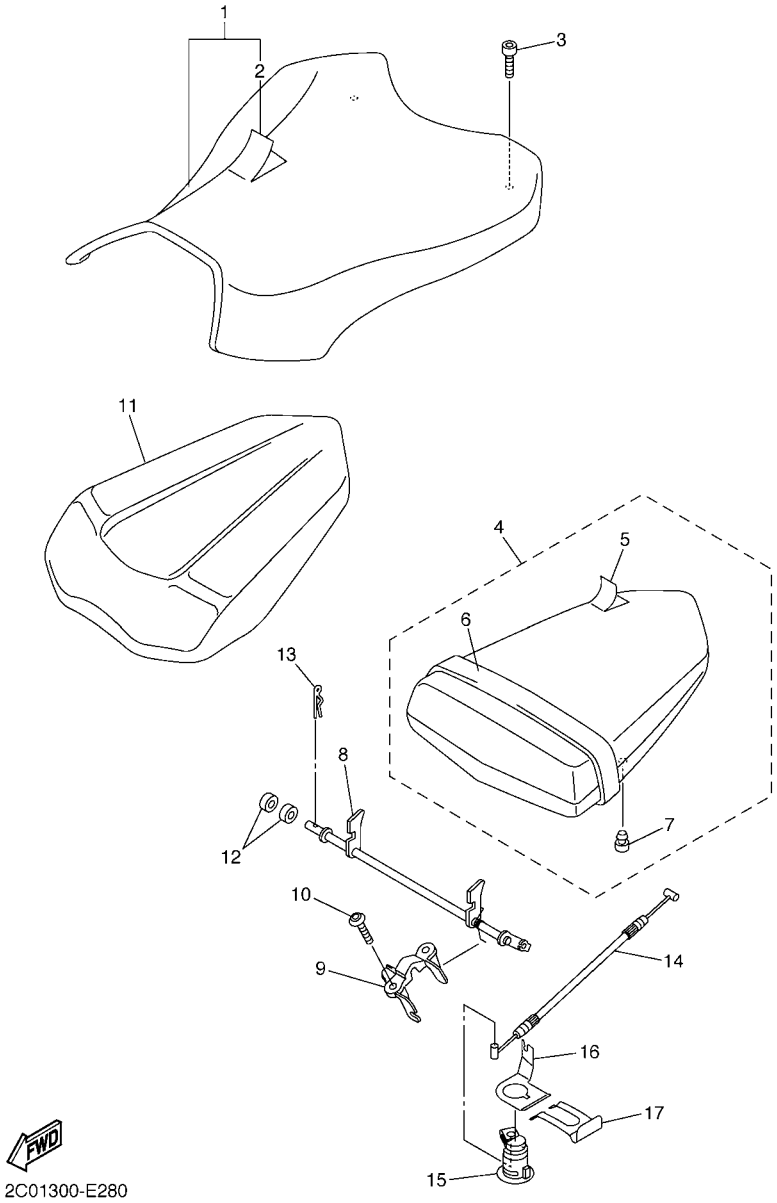

FIG. 28 ASIENTO

REF. Nº	CODIGO Nº	DESCRIPCION	2C01					OBSERVACIONES
1	2C0–24710–00	ASIENTO SIMPLE COMPLETO	1					UR PARA DPBMC,SMX
	2C0–24710–10	ASIENTO SIMPLE COMPLETO	1					UR PARA BWC1
2	2C0–24711–00	.CUBIERTA DE ASIENTO SIMPLE	1					UR PARA DPBMC,SMX
	2C0–24711–10	.CUBIERTA DE ASIENTO SIMPLE	1					UR PARA BWC1
3	90110–06258	TORNILLO ALLEN	2					
4	2C0–24750–00	ASIENTO TANDEM COMPLETO	1					UR PARA DPBMC,SMX
	2C0–24750–10	ASIENTO TANDEM COMPLETO	1					UR PARA BWC1
5	2C0–24751–00	.CUBIERTA DE ASIENTO TANDEM	1					UR PARA DPBMC,SMX
	2C0–24751–10	.CUBIERTA DE ASIENTO TANDEM	1					UR PARA BWC1
6	2C0–24720–00	.BANDA DE ASIENTO COMPLETA	1					UR PARA DPBMC,SMX
	2C0–24720–10	.BANDA DE ASIENTO COMPLETA	1					UR PARA BWC1
7	5SL–24723–00	.AMORTIGUADOR DE ASIENTO	2					
8	2C0–24780–00	CERRADURA SILLIN COMPLETO	1					
9	2C0–24792–00	PLACA	1					
10	90111–06051	TORNILLO	2					
11	2C0–2477A–00–P0	CUBIERTA ASIENTO DOBLE	1					UR DPBMC
	2C0–2477A–00–P1	CUBIERTA ASIENTO DOBLE	1					UR BWC1
	2C0–2477A–00–P2	CUBIERTA ASIENTO DOBLE	1					UR SMX
12	2C0–24825–00	ESPACIADOR DE PORTADOR	2					
13	90468–16001	PRESILLA	1					
14	2C0–2478E–00	CABLE	1					
15	5VY–W2470–00	ASIENTO DE CIERRE COMPLETO	1					
16	5VY–2117K–01	SOPORTE DE CERRADURA	1					
17	5VY–2176V–00	RESORTE, CERRADURA 2	1					

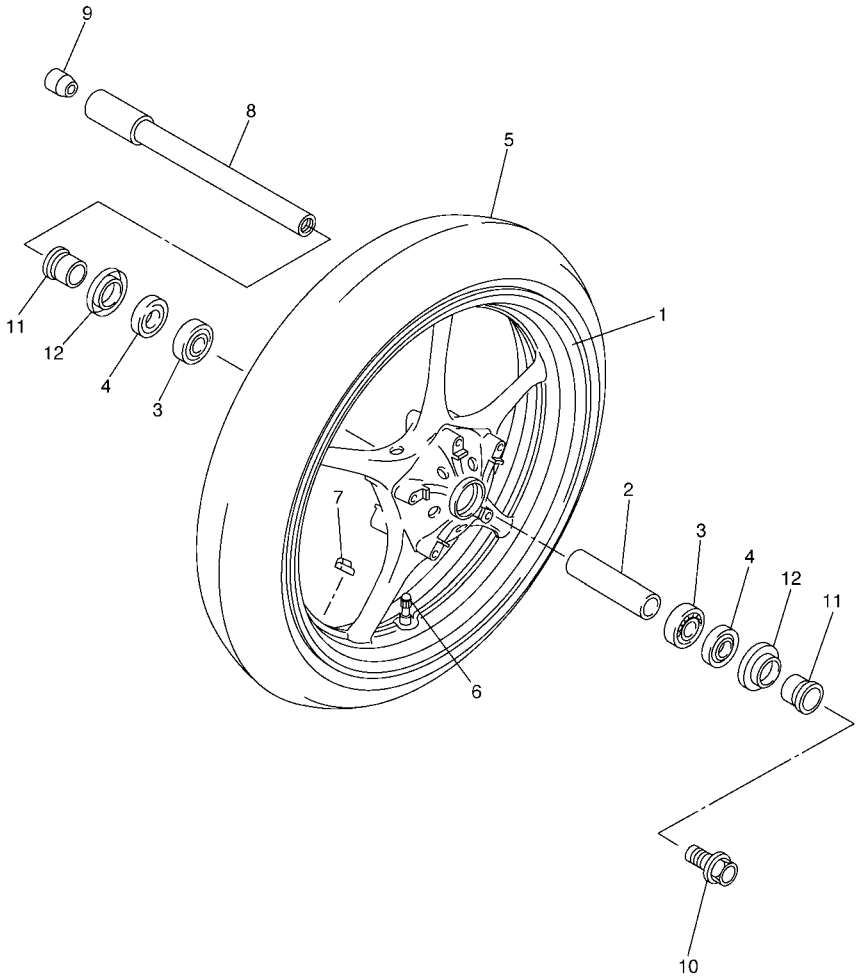

5SLM332-D290

FIG. 29 RUEDA DELANTERA

REF. Nº	CODIGO Nº	DESCRIPCION	2C01					OBSERVACIONES
1	5SL–25168–00–98	RUEDA FUNDIDA DELANTERA	1					PARA DPBMC,BWC1
	5SL–25168–00–0X	RUEDA FUNDIDA DELANTERA	1					PARA SMX
2	4XV–25117–00	ESPACIADOR DE COJINETE	1					
3	93306–07208	COJINETE	2					
4	93106–28043	SELLO ACEITE	2					
5	94112–17083	NEUMATICO(120/70 ZR17M/C 58W)	1					DUNLOP
6	93900–00030	VALVULA DE ARO (TR412)	1					TAIHEIYO
7	5MT–25398–00	BALANCEADOR DE RUEDA (10G)	1					UR
	5MT–25398–10	BALANCEADOR DE RUEDA (20G)	1					UR
	5MT–25398–20	BALANCEADOR DE RUEDA (30G)	1					UR
8	5PW–25181–00	EJE DE LA RUEDA	1					
9	5PW–25188–00	TAPA	1					
10	90105–14002	TORNILLO	1					
11	4XV–25186–00	COLLAR DE RUEDA	2					
12	4XV–25118–00	CUBIERTA DE MASA PARA POLVO	2					

FIG. 30 CALIBRE FRENO DELANTERA

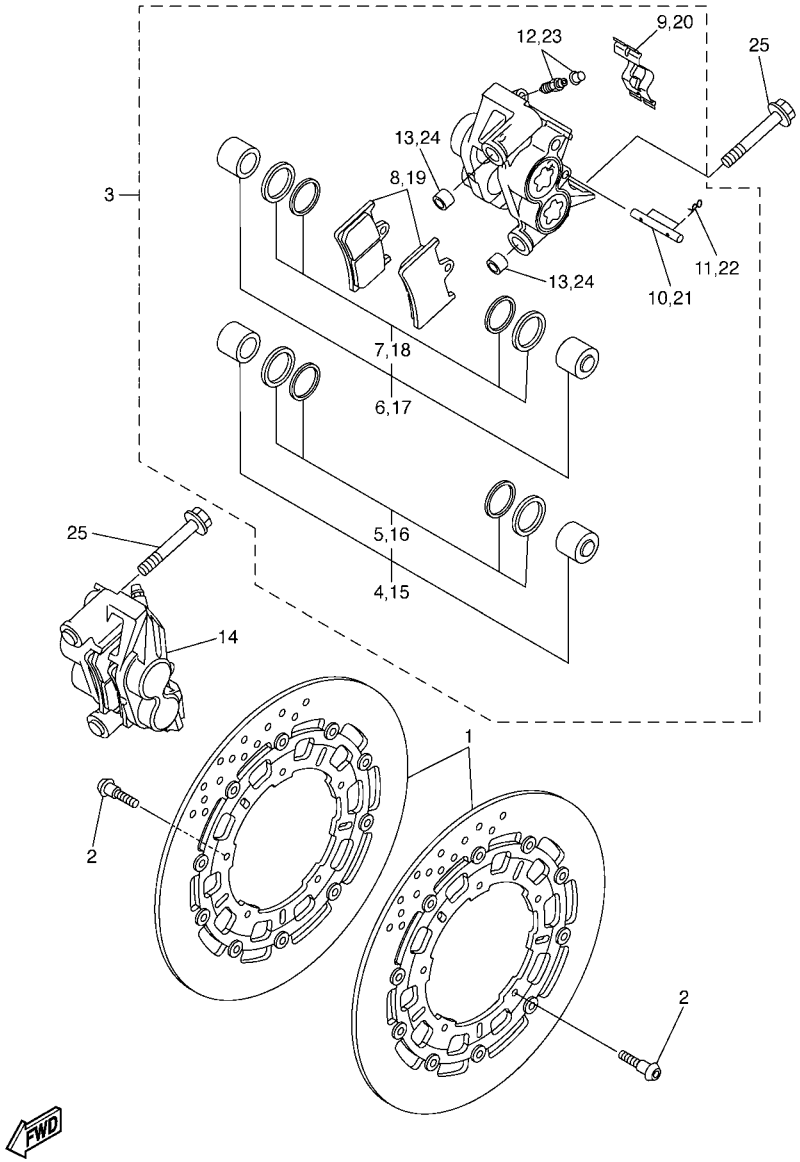

REF. Nº	CODIGO Nº	DESCRIPCION	2C01					OBSERVACIONES
1	2C0–2581T–00	DISCO DE FRENO	2					
2	90149–06043	TORNILLO DE REGLAJE	10					
3	2C0–2580T–00	CALIBRE COMPLETO (IZQUIERDO)	1					PARA DPBMC,BWC1
	2C0–2580T–10	CALIBRE COMPLETO (IZQUIERDO)	1					PARA SMX
4	5PW–W0057–10	.PISTON COMPLETO PINZA	1					
5	5PW–W0047–10	..JUEGO DE RETENES DE PINZA	1					
6	5PW–W0057–00	.PISTON COMPLETO PINZA	1					
7	5PW–W0047–00	..JUEGO DE RETENES DE PINZA	1					
8	2C0–W0045–00	.JUEGO DE COJIN DE FRENO	1					
9	4SV–25919–00	.SOPORTE DE PASTILLAS	1					
10	4SV–25924–00	.PASADOR	1					
11	3GM–25925–00	.PRESILLA	2					
12	1J3–W0048–00	.CJTO TORNILLO DE PURGA	1					
13	5VY–2583B–00	.PASADOR DE PERILLA	2					
14	2C0–2580U–00	CALIBRE COMPLETO (DERECHO)	1					PARA DPBMC,BWC1
	2C0–2580U–10	CALIBRE COMPLETO (DERECHO)	1					PARA SMX
15	5PW–W0057–10	.PISTON COMPLETO PINZA	1					
16	5PW–W0047–10	..JUEGO DE RETENES DE PINZA	1					
17	5PW–W0057–00	.PISTON COMPLETO PINZA	1					
18	5PW–W0047–00	..JUEGO DE RETENES DE PINZA	1					
19	2C0–W0045–00	.JUEGO DE COJIN DE FRENO	1					
20	4SV–25919–00	.SOPORTE DE PASTILLAS	1					
21	4SV–25924–00	.PASADOR	1					
22	3GM–25925–00	.PRESILLA	2					
23	1J3–W0048–00	.CJTO TORNILLO DE PURGA	1					
24	5VY–2583B–00	.PASADOR DE PERILLA	2					
25	90401–10012	PERNO DE UNION	4					

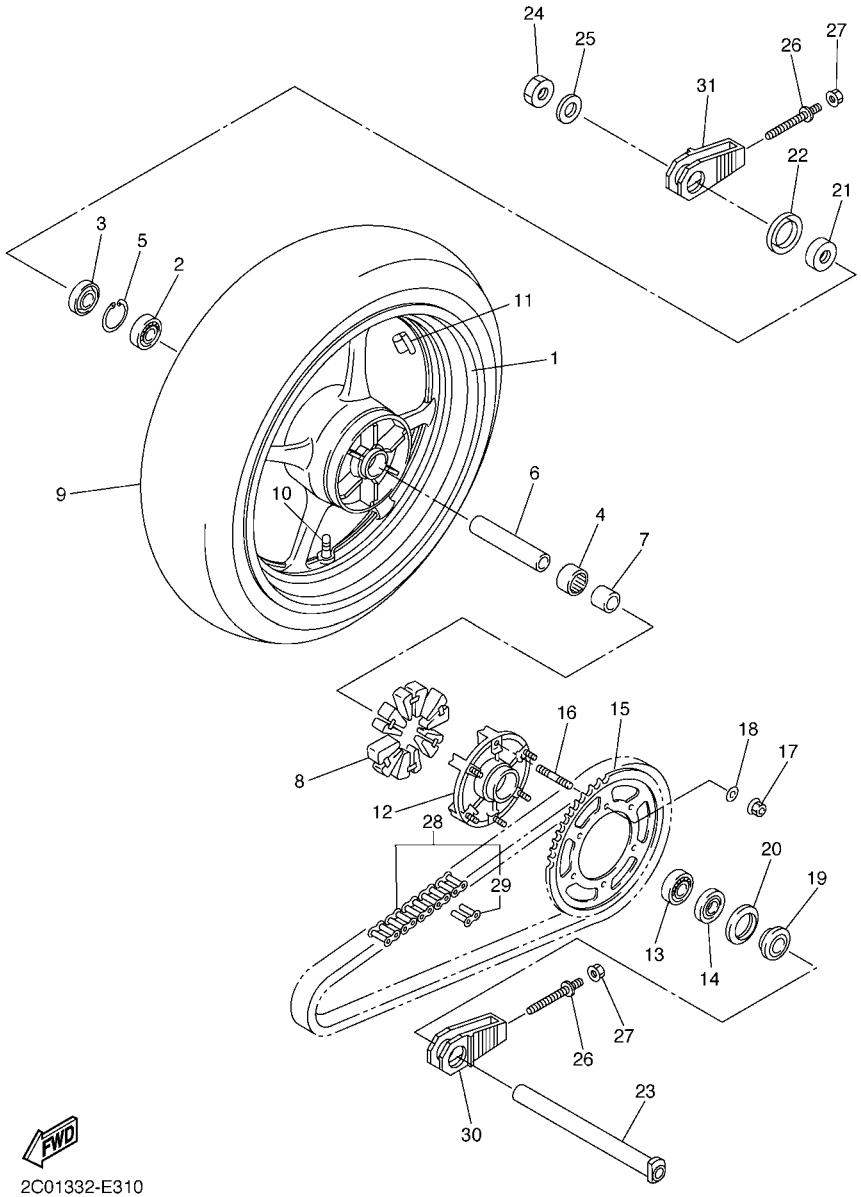

2C01332-E310

FIG. 31 RUEDA TRASERA

REF. Nº	CODIGO Nº	DESCRIPCION	2C01					OBSERVACIONES
1	5SL–25338–00–98	RUEDA FUNDIDA TRASERA	1					PARA DPBMC,BWC1
	5SL–25338–00–0X	RUEDA FUNDIDA TRASERA	1					PARA SMX
2	93306–20531	COJINETE	1					
3	93106–40013	SELLO ACEITE	1					
4	93317–43580	COJINETE	1					
5	93420–61M07	SEGURO	1					
6	4XV–25317–00	ESPACIADOR DE COJINETE	1					
7	5SL–25383–00	COLLAR DE RUEDA	1					
8	2C0–25364–00	AMORTIGUADOR	6					
9	94118–17062	NEUMATICO(180/55 ZR17M/C 73W)	1					DUNLOP
10	93900–00030	VALVULA DE ARO (TR412)	1					TAIHEIYO
11	5MT–25398–00	BALANCEADOR DE RUEDA (10G)	1					UR
	5MT–25398–10	BALANCEADOR DE RUEDA (20G)	1					UR
	5MT–25398–20	BALANCEADOR DE RUEDA (30G)	1					UR
12	5SL–25366–00	EMBRAGUE DE MASA	1					
13	93306–20531	COJINETE	1					
14	93106–40013	SELLO ACEITE	1					
15	2C0–25445–20	CORONA (45T)	1					
16	90116–10485	ESPARRAGO	6					
17	90185–10009	TUERCA AUTOBLOCANTE	6					
18	90201–10021	ARANDELA PLANA	6					
19	5SL–25376–00	COLLAR DE RUEDA	1					
20	5SL–25367–00	CUBIERTA DE MASA PARA POLVO	1					
21	4XV–25376–00	COLLAR DE RUEDA	1					
22	5SL–25327–00	CUBIERTA DE PLACA	1					
23	2C0–25381–00	EJE DE RUEDA	1					
24	90185–24007	TUERCA AUTOBLOCANTE	1					

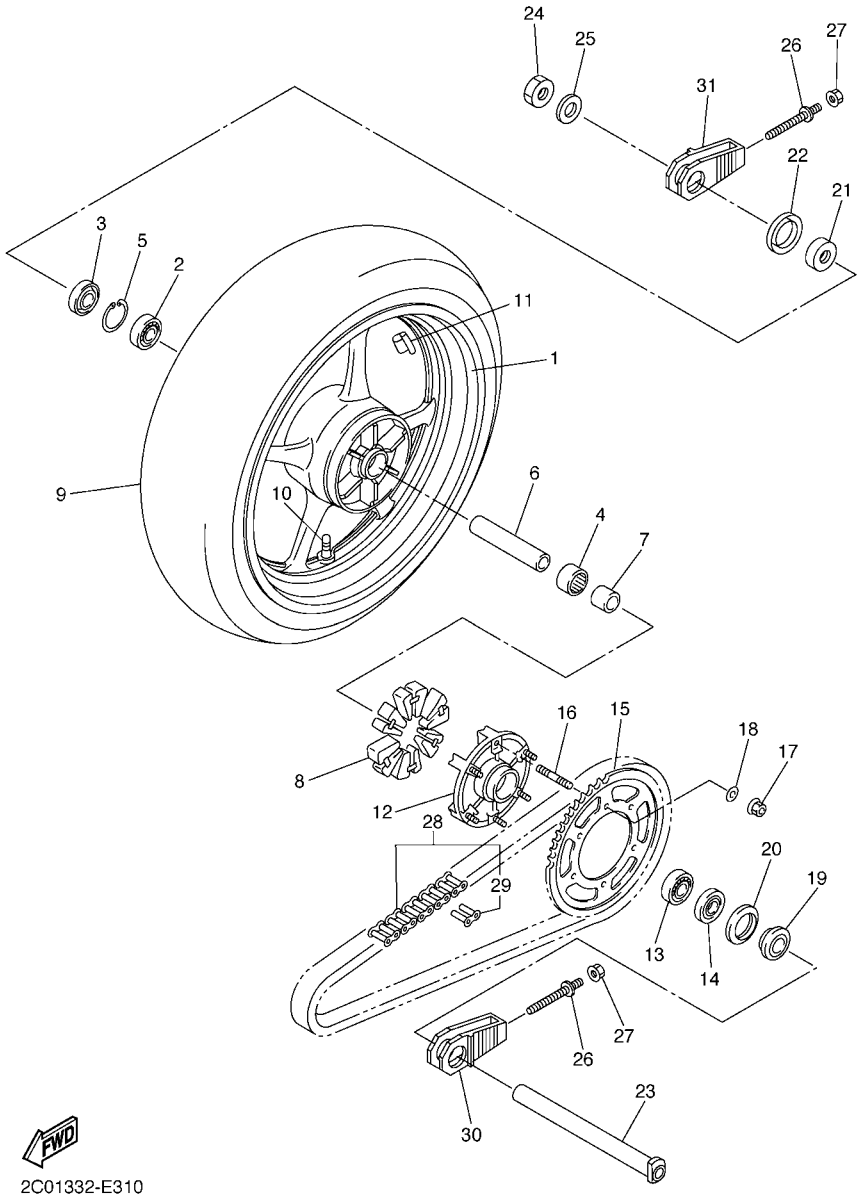

2C01332-E310

FIG. 31 RUEDA TRASERA

REF. Nº	CODIGO Nº	DESCRIPCION	2C01					OBSERVACIONES
25	90201–25020	ARANDELA PLANA	1					
26	2C0–25379–00	PERNO DE TIRADOR DE CADENA	2					
27	95604–08200	TUERCA DE AUTO-CIERRE	2					
28	94582–21114	CADENA	1					
29	94682–21031	.CONECTOR DE CADENA	1					
30	2C0–25388–00	TIRADOR DE CADENA 1	1					
31	2C0–25389–00	TIRADOR DE CADENA 2	1					

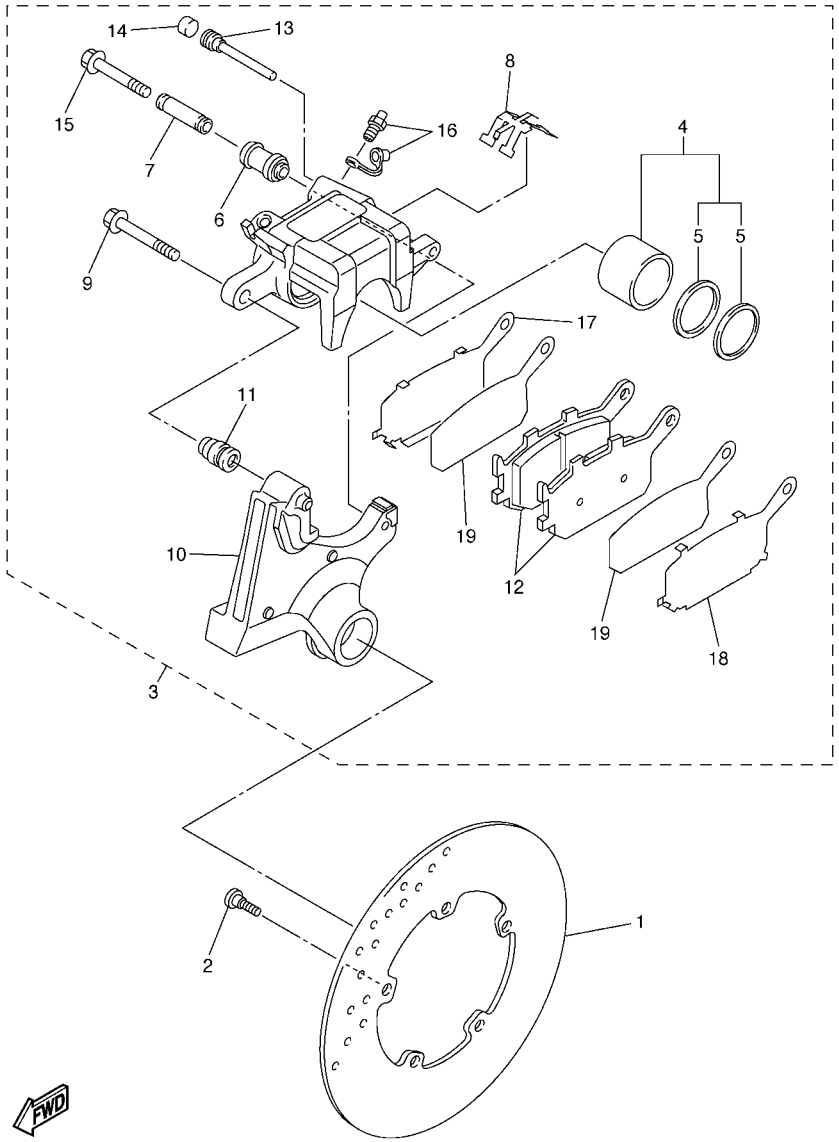

2C01300-E320

FIG. 32 CALIBRE FRENO TRASERA

REF. Nº	CODIGO Nº	DESCRIPCION	2C01					OBSERVACIONES
1	5SL–2582W–00	DISCO DE FRENO TRASEROS 2	1					
2	90149–08009	TORNILLO DE REGLAJE	5					
3	2C0–2580W–00	CALIBRE COMPLETO TRASEROS 2	1					
4	5VY–W0057–00	.PISTON COMPLETO PINZA	1					
5	5SL–W0047–00	..JUEGO DE RETENES DE PINZA	1					
6	5SL–25917–00	.FUNDA DE CALIBRE	1					
7	5SL–25838–00	.CASQUILLO DE CALIBRE	1					
8	5SL–25919–00	.SOPORTE DE PASTILLAS	1					
9	5SL–25914–00	.PASADOR	1					
10	2C0–25921–00	.MENSULA DE SOPORTE	1					
11	3JD–25917–00	.FUNDA DE CALIBRE	1					
12	5VX–W0046–00	.JUEGO DE PASTILLAS DE FRENO 2	1					
13	8CR–25924–00	.PASADOR	1					
14	5DH–25916–00	.TAPON	1					
15	5SL–25926–00	.PERNO	1					
16	1UY–W0048–00	.CJTO TORNILLO DE PURGA	1					
17	5SL–25827–00	.CUNA DE CALIBRE	1					
18	5SL–25827–10	.CUNA DE CALIBRE	1					
19	5SL–25828–00	.CUNA DE CALIBRE	2					

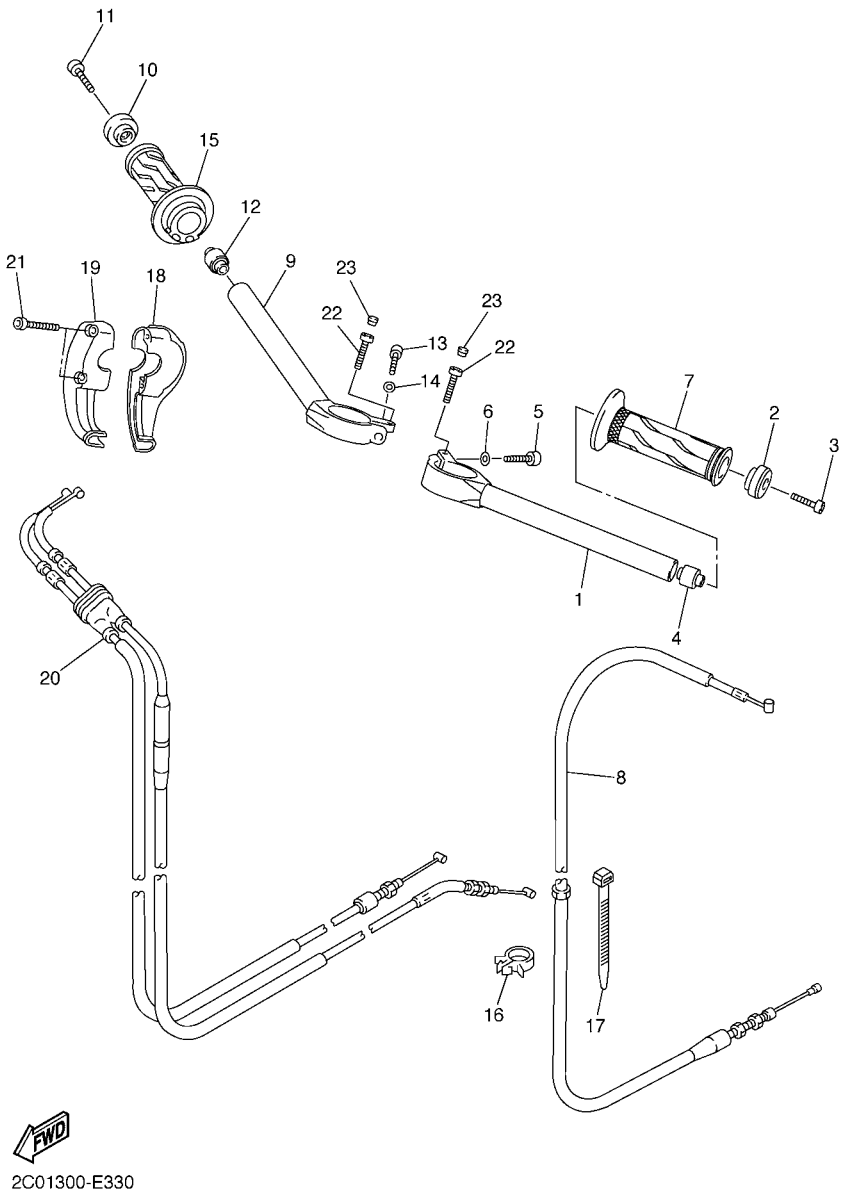

FIG. 33 MANILLAR & CABLE

REF. Nº	CODIGO Nº	DESCRIPCION	2C01					OBSERVACIONES
1	2C0–26121–00	MANUBRIO (MI)	1					
2	5PW–26246–00	EXTREMO DE EMPUNADURA	1					
3	91317–06025	PERNO	1					
4	4XV–23434–00	SOPORTE DE AMORTIGUADOR	1					
5	91314–08030	PERNO	1					
6	90201–08452	ARANDELA PLANA	1					
7	2C0–26241–00	EMPUNADURA	1					
8	2C0–26335–00	CABLE DE EMBRAGUE	1					
9	2C0–26122–00	MANUBRIO (MD)	1					
10	5PW–26246–00	EXTREMO DE EMPUNADURA	1					
11	91317–06025	PERNO	1					
12	4XV–23434–00	SOPORTE DE AMORTIGUADOR	1					
13	91314–08030	PERNO	1					
14	90201–08452	ARANDELA PLANA	1					
15	2C0–26240–00	EMPUNADURA COMPLETA	1					
16	90464–15157	BRIDA	1					
17	90464–15195	BRIDA	1					
18	5VY–26281–00	TAPA DE EMPUNADURA SUPERIOR	1					
19	2C0–26282–00	TAPA DE EMPUNADURA INFERIOR	1					
20	2C0–26302–00	CABLE DE ACELERADOR COMPLETO	1					
21	90110–05018	TORNILLO ALLEN	2					
22	91317–06025	PERNO	2					
23	2H9–23469–00	TAPA DE PERNO	2					

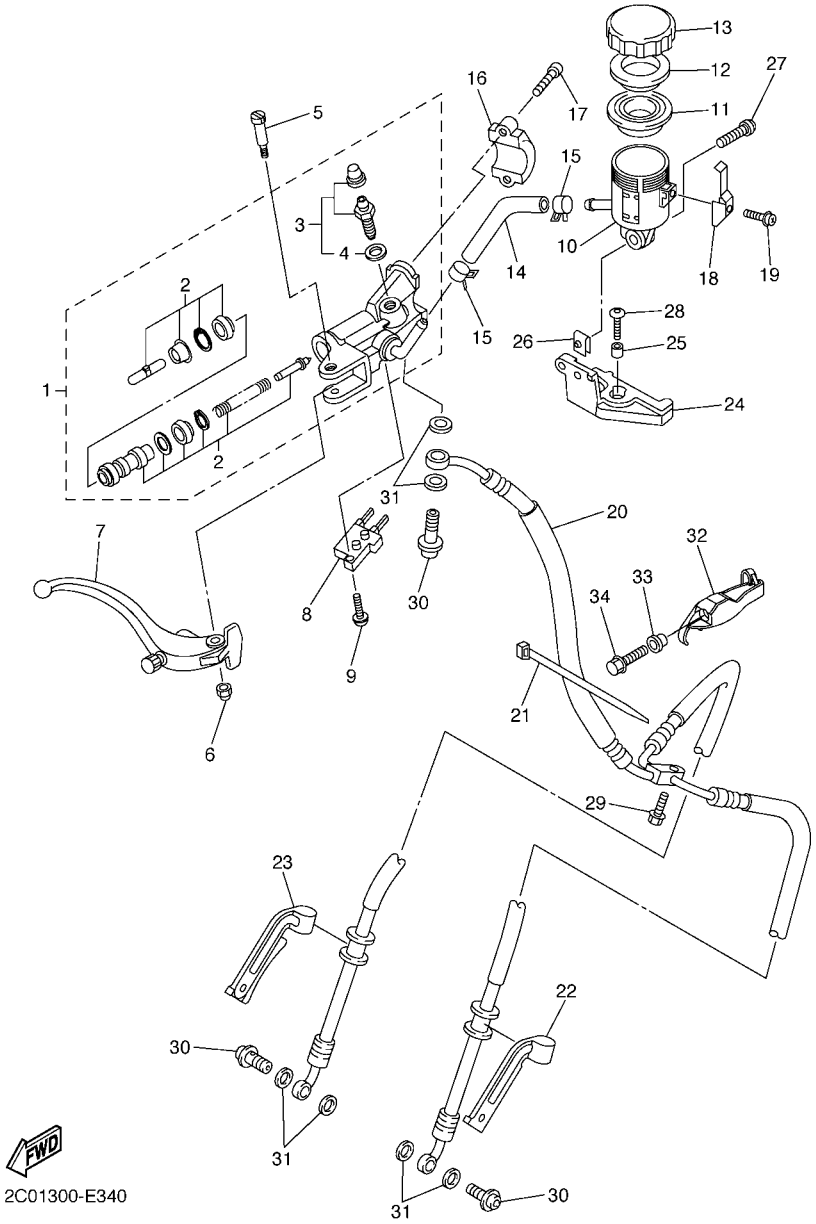

FIG. 34 CILINDRO MAESTRO DELANTERO

REF. Nº	CODIGO Nº	DESCRIPCION	2C01					OBSERVACIONES
1	5SL–W2587–00	CILINDRO MAESTRO SUB COMPLET	1					
2	5VY–W0041–00	.JUEGO DE CILINDRO MAESTRO	1					
3	5VY–W0048–00	.CJTO TORNILLO DE PURGA	1					
4	5VY–25975–00	..SELLO 1	1					
5	5VY–2589F–01	PERNO DE PALANCA	1					
6	5VS–2586F–00	TUERCA DE CUBIERTA	1					
7	5SL–83922–10	PALANCA 2	1					
8	4HM–83980–00	INTERRUP. DE PARADA DELANTERO	1					
9	5VS–2585H–00	TORNILLO	1					
10	5SL–25894–20	TANQUE DE RESERVA	1					
11	5VY–25854–00	DIAFRAGMA TANQUE RESERVA	1					
12	5VY–25855–00	BUJE DE DIAFRAGMA	1					
13	5VY–25852–00	TAPA DE TANQUE DE RESERVA	1					
14	2C0–2589E–00	TUBO	1					
15	90467–120A3	PRESILLA	2					
16	5VS–25867–00	SOPORTE DE CILINDRO MAESTRO	1					
17	5VS–26332–00	PERNO	2					
18	5VY–2589G–00	SOPORTE	1					
19	5VY–2589H–00	TORNILLO	1					
20	2C0–25872–00	MANGUERA DE FRENO 1	1					
21	3MA–82591–00	BANDA	1					
22	2C0–25886–00	SOPORTE DE MANGUERA FRENO	1					
23	2C0–25887–00	SOPORTE DE MANGUERA FRENO	1					
24	2C0–26292–00	SOPORTE	1					
25	90387–06057	ESPACIADOR	1					
26	90183–050A0	TUERCA DE RESORTE	1					
27	90111–05026	TORNILLO	1					

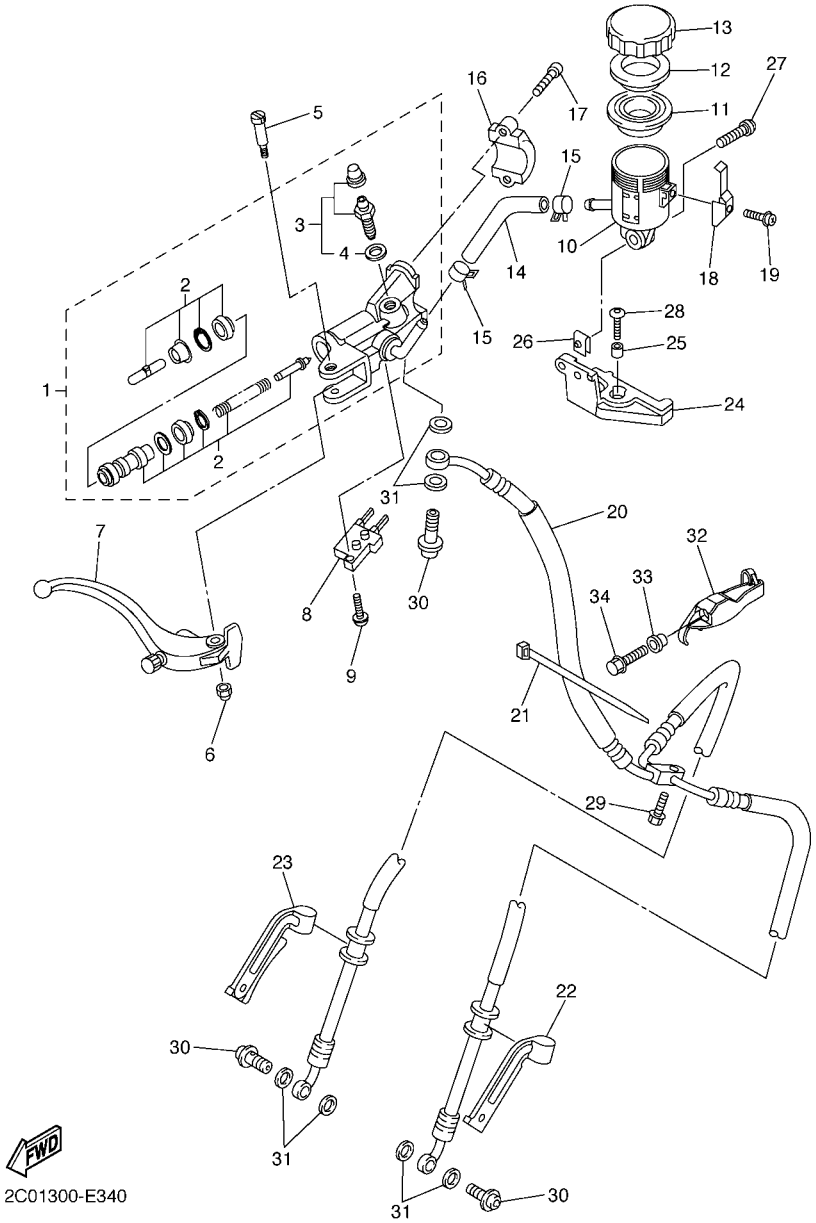

FIG. 34 CILINDRO MAESTRO DELANTERO

REF. Nº	CODIGO Nº	DESCRIPCION	2C01					OBSERVACIONES
28	90111–06041	TORNILLO	1					
29	95817–06020	TUERCA DE REBORDE	1					
30	90401–10172	PERNO DE UNION	3					
31	90201–10118	ARANDELA PLANA	6					
32	2C0–26279–00	GUIA DE CABLE	1					
33	90387–05024	ESPACIADOR	1					
34	90110–05014	TORNILLO ALLEN	1					

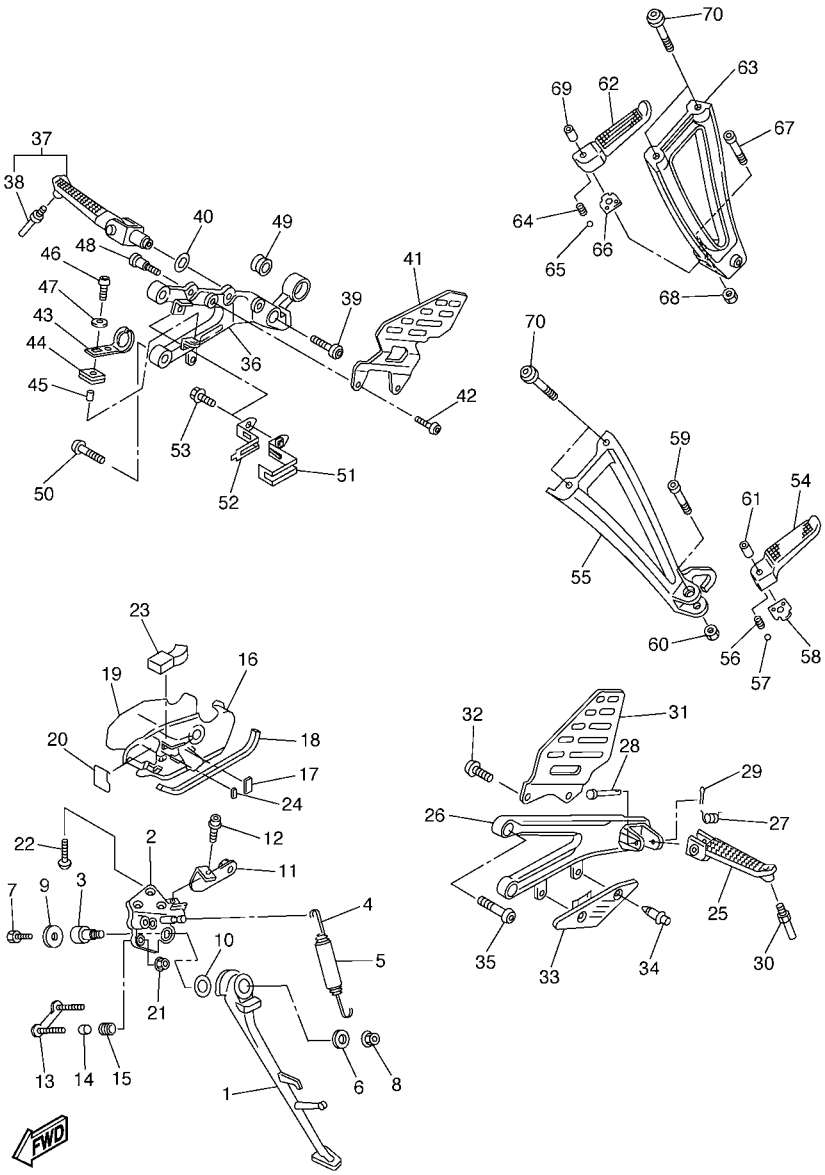

FIG. 35 SOPORTE & APOYAPIE

REF. Nº	CODIGO Nº	DESCRIPCION	2C01					OBSERVACIONES
1	2C0–27311–00	PUNTAL LATERAL	1					
2	2C0–27321–00	SOPORTE DE PUNTAL LATERAL	1					
3	2C0–27351–00	GUIA DE PUNTAL LATERAL	1					
4	90506–18008	RESORTE DE TENSION	1					
5	90445–19002	TUBO (L60)	1					
6	90201–10035	ARANDELA PLANA	1					
7	90101–08662	TORNILLO	1					
8	95602–10200	TUERCA DE AUTO-CIERRE	1					
9	90201–08050	ARANDELA PLANA	1					
10	90201–146F9	ARANDELA PLANA	1					
11	2C0–2836F–00	MENSULA 3	1					
12	90105–06020	TORNILLO	1					
13	2C0–27263–00	SOPORTE 1	1					
14	90387–05025	ESPACIADOR	2					
15	90480–11006	TAPON	2					
16	2C0–27453–00	CUBIERTA APOYAPIE 1	1					
17	2C0–27414–00	AMORTIGUADOR DE APOYAPIE	1					
18	2C0–27415–00	PLACA DE APOYAPIE	1					
19	2C0–28428–00	SELLO 1	1					
20	2C0–28429–00	SELLO 2	1					
21	90185–05009	TUERCA AUTOBLOCANTE	2					
22	90111–08025	TORNILLO	3					
23	2C0–28425–00	AMORTIGUADOR 3	1					
24	2C0–21485–00	AMORTIGUADOR DE GOMA 1	1					
25	2C0–27451–00	APOYAPIE	1					
26	2C0–27442–00	SOPORTE 2	1					
27	90508–18134	RESORTE DE TORSION	1					

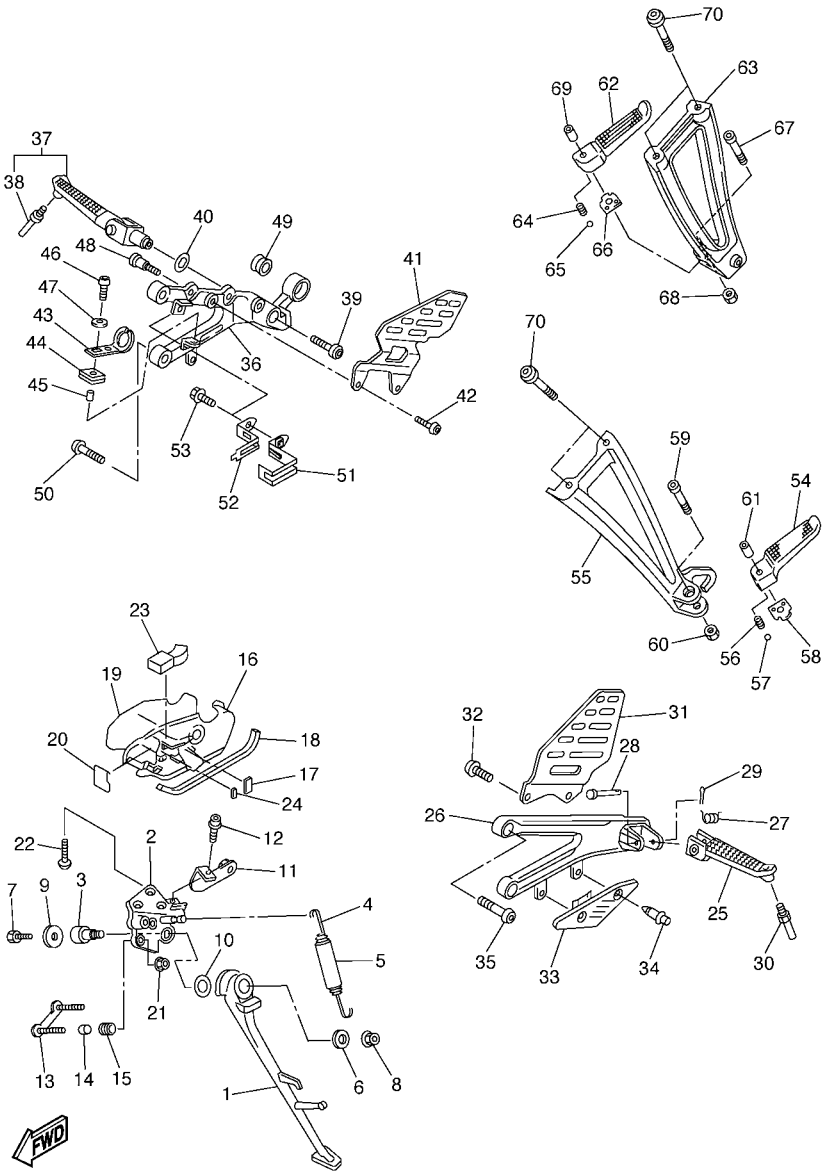

FIG. 35 SOPORTE & APOYAPIE

REF. Nº	CODIGO Nº	DESCRIPCION	2C01					OBSERVACIONES
28	90240–08084	PASADOR CON HOYO	1					
29	91402–25015	CHAVETA	1					
30	2C0–27435–00	PERNO	1					
31	2C0–27445–00	PLACE 1	1					
32	90149–06233	TORNILLO DE REGLAJE	2					
33	2C0–27491–00	PROTECTOR	1					
34	90269–06008	REMACHE	2					
35	90109–085G6	PERNO	2					
36	2C0–27443–00	SOPORTE 3	1					
37	2C0–27420–00	APOYAPIE DELANTERO (MD)	1					
38	2C0–27435–00	.PERNO	1					
39	90109–103A9	PERNO	1					
40	90214–13002	ARANDELA DE POSICION	1					
41	2C0–27446–00	PLACE 2	1					
42	90149–06233	TORNILLO DE REGLAJE	2					
43	2C0–2144G–00	SOPORTE DE INTERRUPTOR	1					
44	90480–12607	TAPON	1					
45	90387–06023	ESPACIADOR	1					
46	92017–06016	PERNO	1					
47	90201–06380	ARANDELA PLANA	1					
48	90109–066F0	PERNO	2					
49	2C0–14747–00	AMORTIGUADOR DE SILENCIADOR	1					
50	90109–085G6	PERNO	2					
51	2C0–2116K–00	SOPORTE 8	1					
52	2C0–2116L–00	SOPORTE 9	1					
53	95024–06012	PERNO, DE BRIDA	1					
54	5JJ–27431–00	APOYAPIE POSTERIOR 1	1					

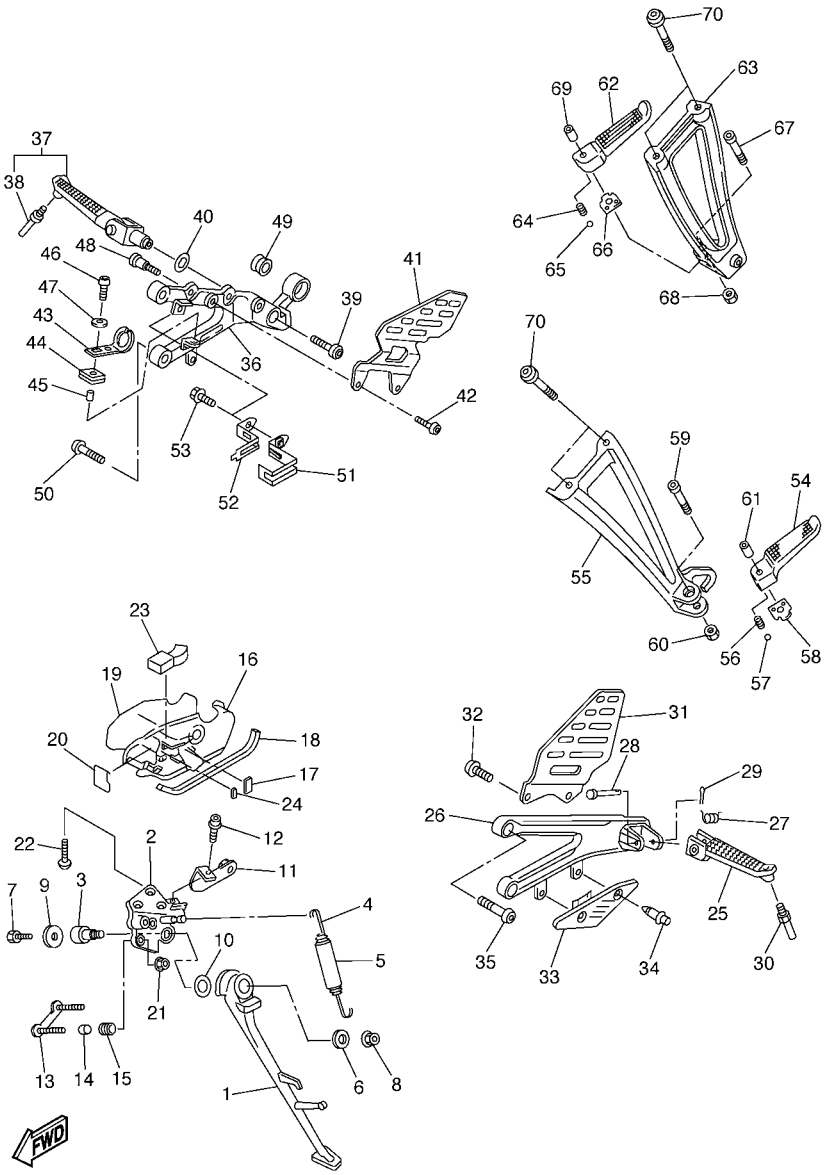

FIG. 35 SOPORTE & APOYAPIE

REF. Nº	CODIGO Nº	DESCRIPCION	2C01					OBSERVACIONES
55	2C0–2741L–00	MENSULA 4	1					
56	90501–12743	RESORTE DE COMPRESION	1					
57	93501–04011	BOLA	1					
58	5JJ–27437–01	ARANDELA ESPECIAL	1					
59	91314–06035	PERNO	1					
60	95604–06200	TUERCA DE AUTO-CIERRE	1					
61	90387–06697	ESPACIADOR	1					
62	5JJ–27441–00	APOYAPIE POSTERIOR 2	1					
63	2C0–2742L–00	MENSULA 5	1					
64	90501–12743	RESORTE DE COMPRESION	1					
65	93501–04011	BOLA	1					
66	5JJ–27437–01	ARANDELA ESPECIAL	1					
67	91314–06035	PERNO	1					
68	95604–06200	TUERCA DE AUTO-CIERRE	1					
69	90387–06697	ESPACIADOR	1					
70	90110–08220	TORNILLO ALLEN	4					

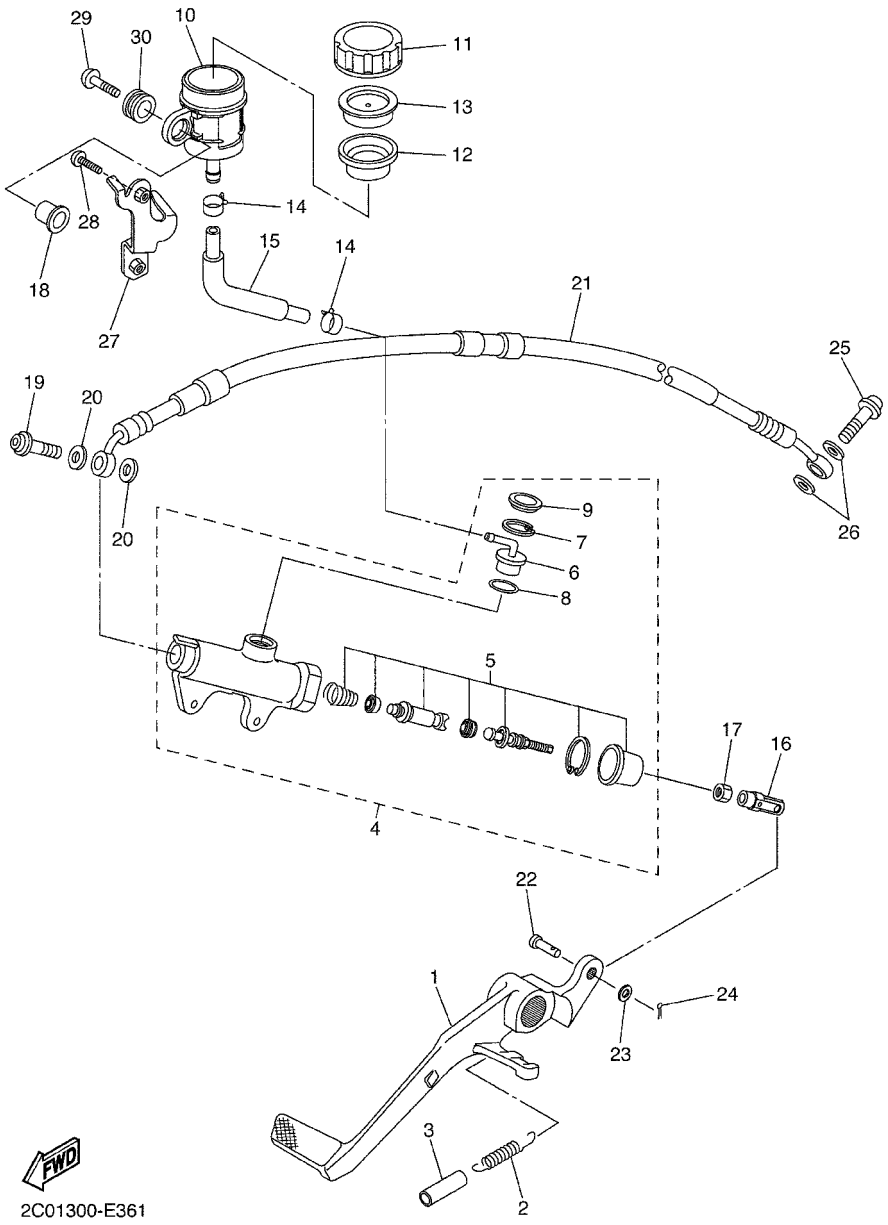

FIG. 36 CILINDRO MAESTRO TRASERO

REF. Nº	CODIGO Nº	DESCRIPCION	2C01					OBSERVACIONES
1	2C0–27211–00	PEDAL DE FRENO	1					
2	90506–20193	RESORTE DE TENSION	1					
3	90446–15386	TUBO RESEIRADERO	1					
4	2C0–2583V–00	CILINDRO, MAESTRO TRASERO	1					
5	5XT–W0042–60	.JUEGO DE CILINDRO MAESTRO	1					
6	4ML–2582A–50	.CONECTOR	1					
7	2VN–25866–00	.PRESILLA REDONDA	1					
8	93210–15620	.ANILLO O	1					
9	3FV–2589A–00	.CUBIERTA PARA POLVO	1					
10	2C0–25894–00	TANQUE DE RESERVA	1					
11	4PX–25852–00	TAPA DE TANQUE DE RESERVA	1					
12	2VN–25854–00	DIAFRAGMA TANQUE RESERVA	1					
13	2VN–25855–00	BUJE DE DIAFRAGMA	1					
14	90467–12085	PRESILLA	2					
15	2C0–25895–00	MANGUERA DE TANQUE DE RESERVA	1					
16	4XV–27222–01	UNION	1					
17	95307–08700	TUERCA	1					
18	90387–05028	ESPACIADOR	1					
19	90401–10172	PERNO DE UNION	1					
20	90201–10118	ARANDELA PLANA	2					
21	2C0–25874–00	MANGUERA DE FRENO	1					
22	91702–06018	PASADOR DE ADRAZADERA	1					
23	92907–06200	ARANDELA	1					
24	91402–16012	CHAVETA	1					
25	90401–10172	PERNO DE UNION	1					
26	90201–10118	ARANDELA PLANA	2					
27	2C0–2134F–00	SOPORTE, TANQUE DE RESERVA	1					

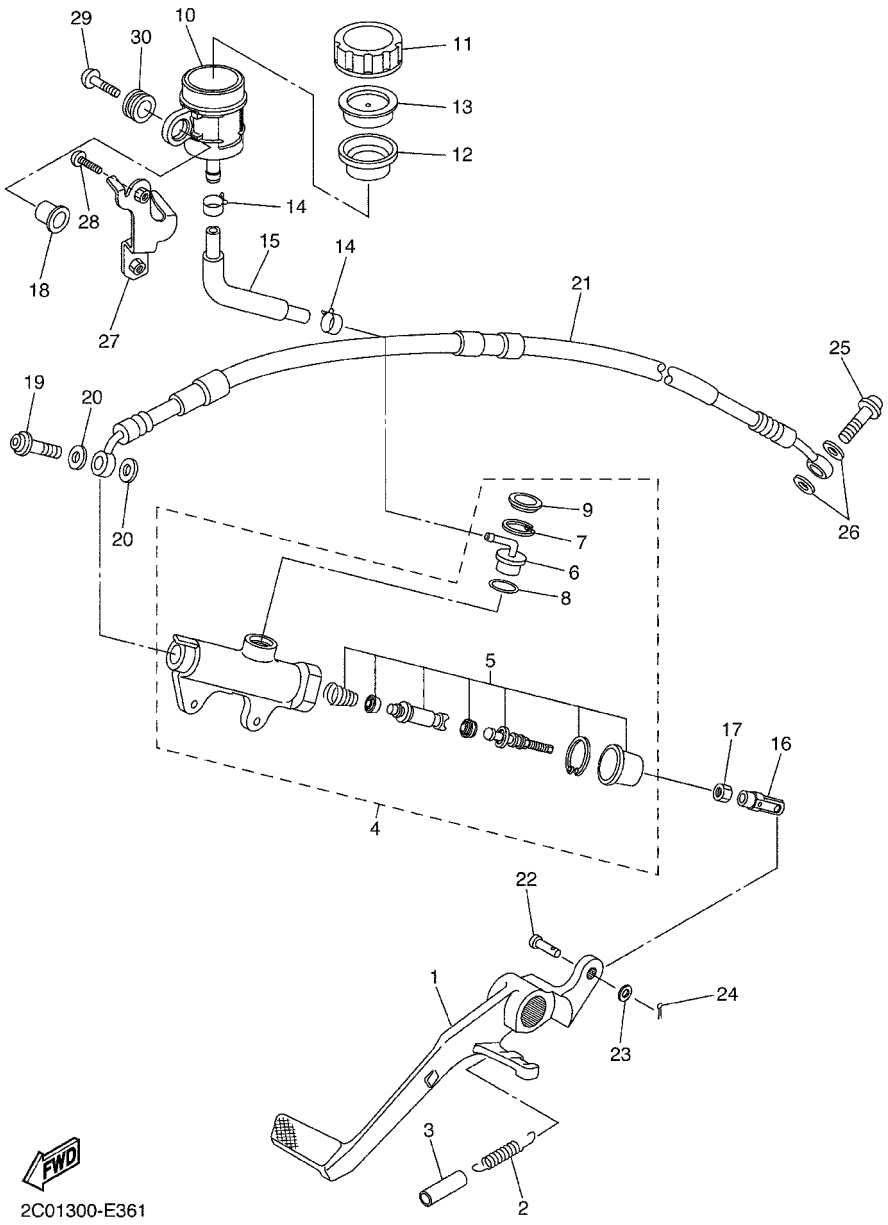

FIG. 36 CILINDRO MAESTRO TRASERO

REF. Nº	CODIGO Nº	DESCRIPCION	2C01					OBSERVACIONES
28	92017–06025	PERNO	1					
29	90111–05026	TORNILLO	1					
30	2C0–26326–00	TAPON	1					

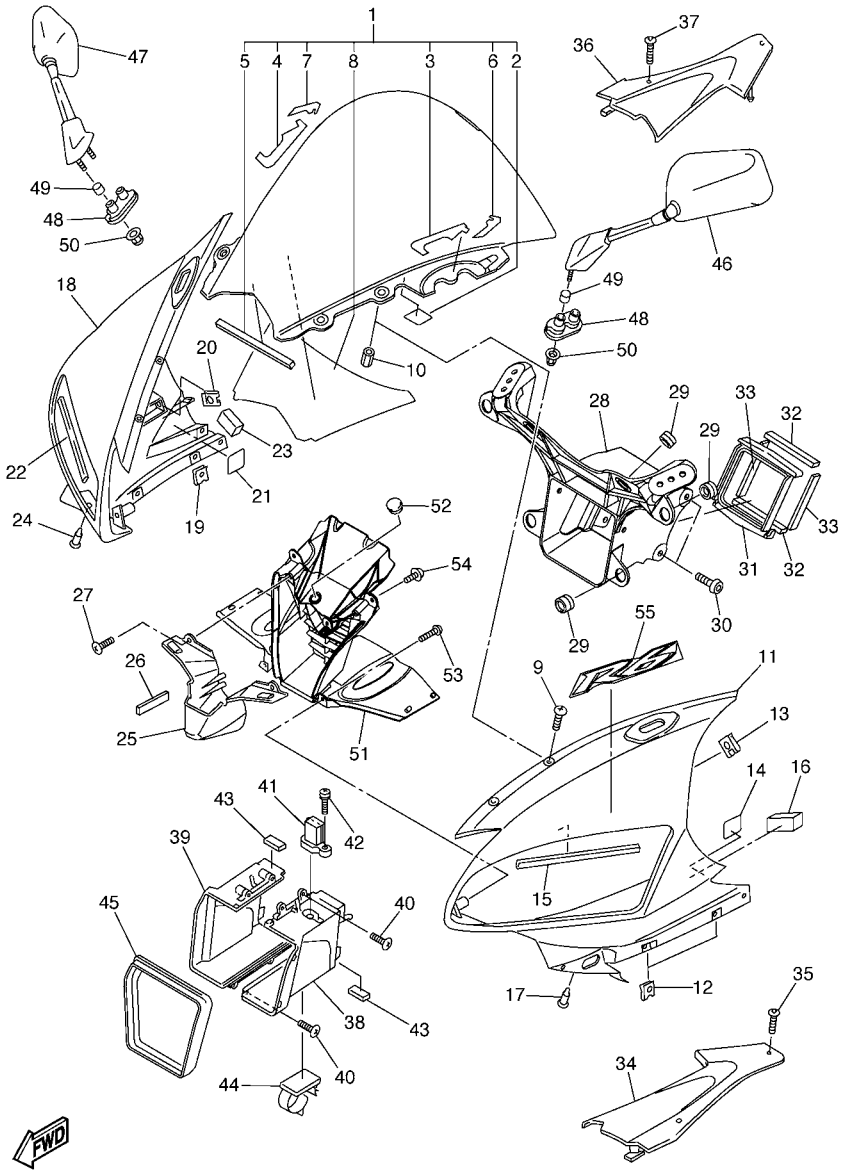

2C01300-E370

FIG. 37 BOVEDA 1

REF. Nº	CODIGO Nº	DESCRIPCION	2C01					OBSERVACIONES
1	2C0–Y2881–00	PARABRISA	1					
2	1UF–15379–00	.SELLO	2					
3	2C0–28238–00	.SELLO 3	1					
4	2C0–28268–00	.SELLO 4	1					
5	2C0–28237–00	.AMORTIGUADOR 3	1					
6	2C0–28218–00	.SELLO 1	1					
7	2C0–28228–00	.SELLO 2	1					
8	2C0–2832P–00	.CALCOMANIA, DE BOVEDA 18	1					
9	90150–05024	TORNILLO CABEZA REDONDA	4					
10	90179–05523	TUERCA	4					
11	2C0–2835G–00–P0	CARROCERIA, DELANT. SUP. 1	1					UR DPBMC
	2C0–2835G–00–P1	CARROCERIA, DELANT. SUP. 1	1					UR BWC1
	2C0–2835G–00–P2	CARROCERIA, DELANT. SUP. 1	1					UR SMX
12	90183–05076	TUERCA DE RESORTE	4					
13	90183–05042	TUERCA DE RESORTE	3					
14	1UF–15379–00	SELLO	1					
15	2C0–28455–00	AMORTIGUADOR 4	1					
16	2C0–2414R–00	EQUILIBRIO, CUBIERTA	1					
17	90269–06008	REMACHE	1					
18	2C0–2835H–00–P0	CARROCERIA, DELANT. SUP. 2	1					UR DPBMC
	2C0–2835H–00–P1	CARROCERIA, DELANT. SUP. 2	1					UR BWC1
	2C0–2835H–00–P2	CARROCERIA, DELANT. SUP. 2	1					UR SMX
19	90183–05076	TUERCA DE RESORTE	4					
20	90183–05042	TUERCA DE RESORTE	3					
21	1UF–15379–00	SELLO	1					
22	2C0–28455–00	AMORTIGUADOR 4	1					
23	2C0–2414R–00	EQUILIBRIO, CUBIERTA	1					

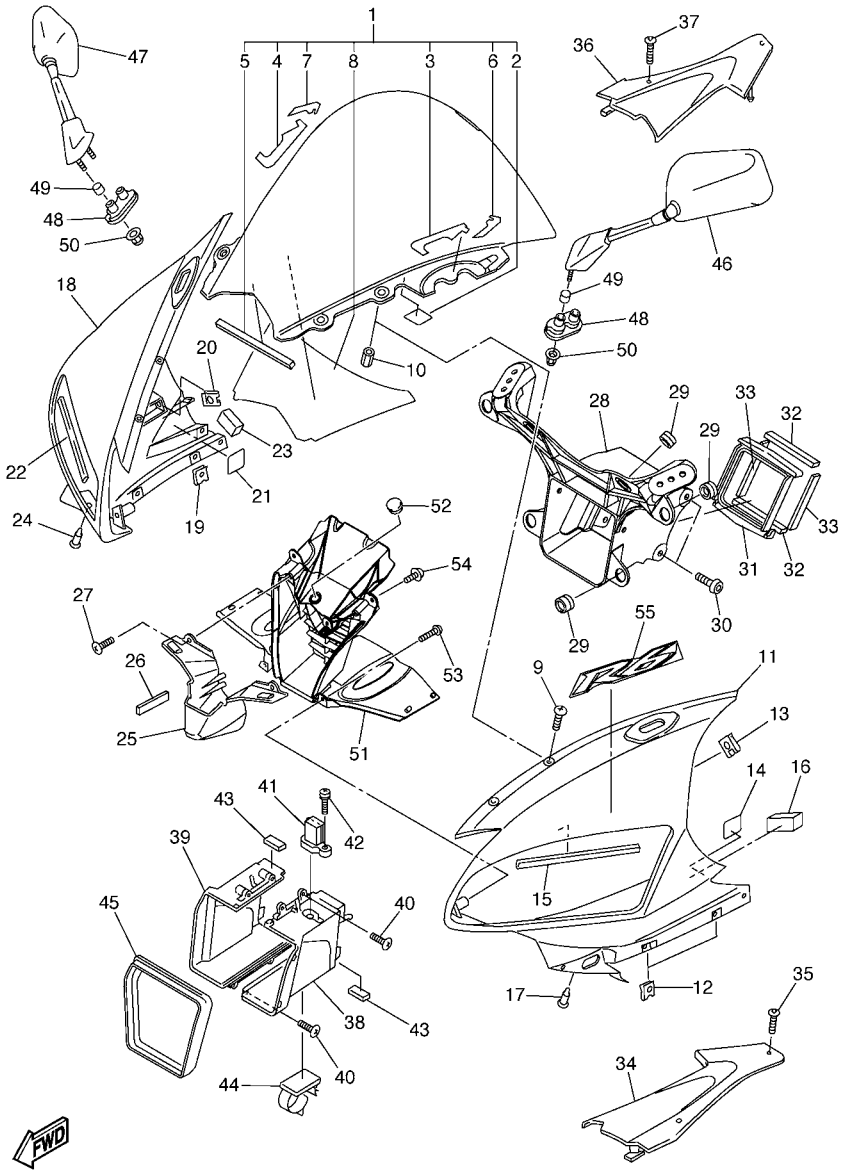

2C01300-E370

FIG. 37 BOVEDA 1

REF. Nº	CODIGO Nº	DESCRIPCION	2C01					OBSERVACIONES
24	90269–06008	REMACHE	1					
25	2C0–28365–00–P0	CUBIERTA	1					UR DPBMC
	2C0–28365–00–P1	CUBIERTA	1					UR BWC1
	2C0–28365–00–P2	CUBIERTA	1					UR SMX
26	2C0–28372–00	AMORTIGUADOR	2					
27	97707–40016	TORNILLO ROSCA HEMBRA	2					
28	2C0–28356–00	SOPORTE 1	1					
29	4XV–83513–00	AMORTIGUADOR	7					
30	90111–06038	TORNILLO	4					
31	2C0–28342–00	UNION	1					
32	2C0–28217–00	AMORTIGUADOR 1	2					
33	2C0–28227–00	AMORTIGUADRO 2	2					
34	2C0–2837L–00	PANEL DE CONSOLA	1					
35	90111–05021	TORNILLO	2					
36	2C0–2837M–00	PANEL, DE CONSOLA 2	1					
37	90111–05021	TORNILLO	2					
38	2C0–2838R–00	CONDUCTO 2	1					
39	2C0–2838T–00	CONDUCTO 3	1					
40	97707–40016	TORNILLO ROSCA HEMBRA	4					
41	8FP–85886–00	SENSOR	1					
42	97707–50116	TORNILLO ROSCA HEMBRA	1					
43	51Y–21639–00	AMORTIGUADOR 2	4					
44	90464–13007	BRIDA	1					
45	2C0–28371–00	AMORTIGUADOR	1					
46	2C0–26280–00	ESPEJO COMPLETO (IZQUIERDO)	1					
47	2C0–26290–00	ESPEJO COMPLETO (DERECHO)	1					
48	2C0–26298–00	PLACA DE ESPEJO 1	2					

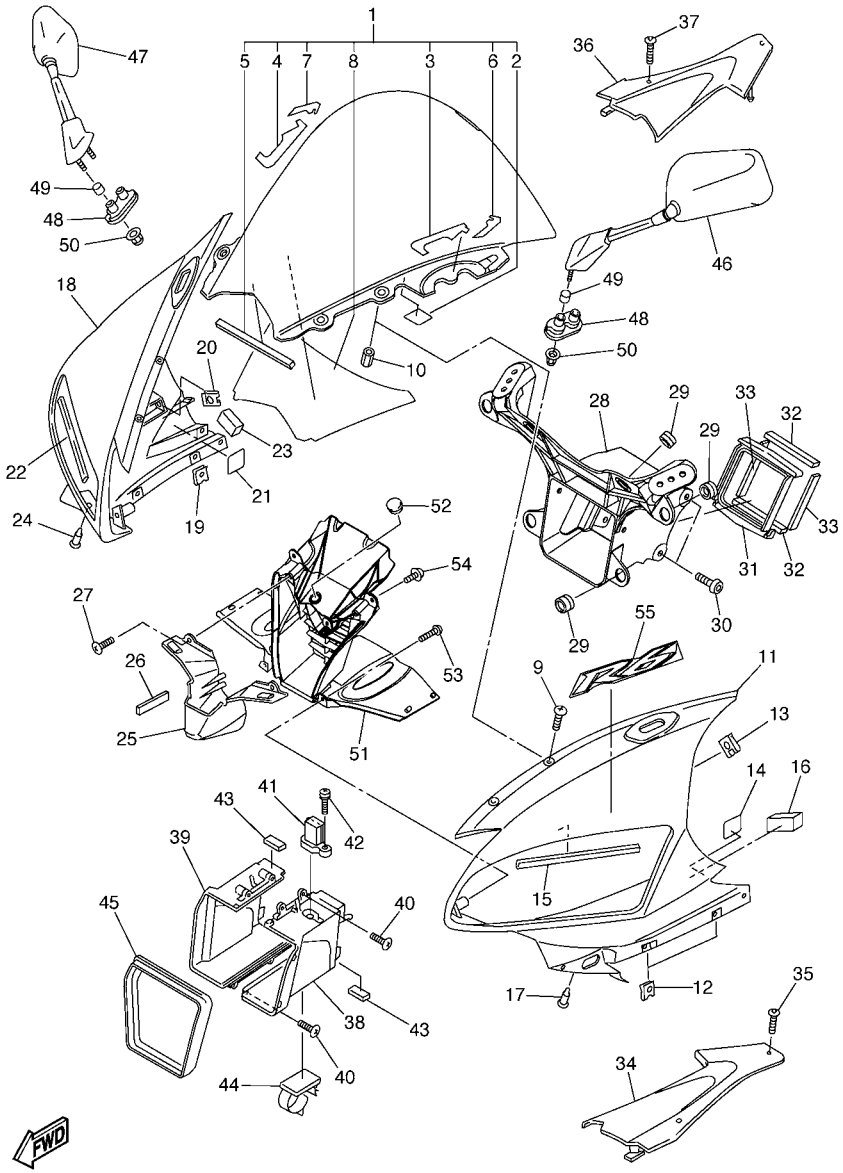

2C01300-E370

FIG. 37 BOVEDA 1

REF. Nº	CODIGO Nº	DESCRIPCION	2C01					OBSERVACIONES
49	90387–0602R	ESPACIADOR	4					
50	90176–06055	TUERCA CORONA	4					
51	2C0–2836K–00	PANEL 1	1					
52	90338–12192	TAPON	1					
53	97707–50016	TORNILLO	2					
54	90160–05006	TORNILLO REDONDO ROSCA HEMBRA	2					
55	2C0–28328–00	EMBLEMA	1					PARA BWC1

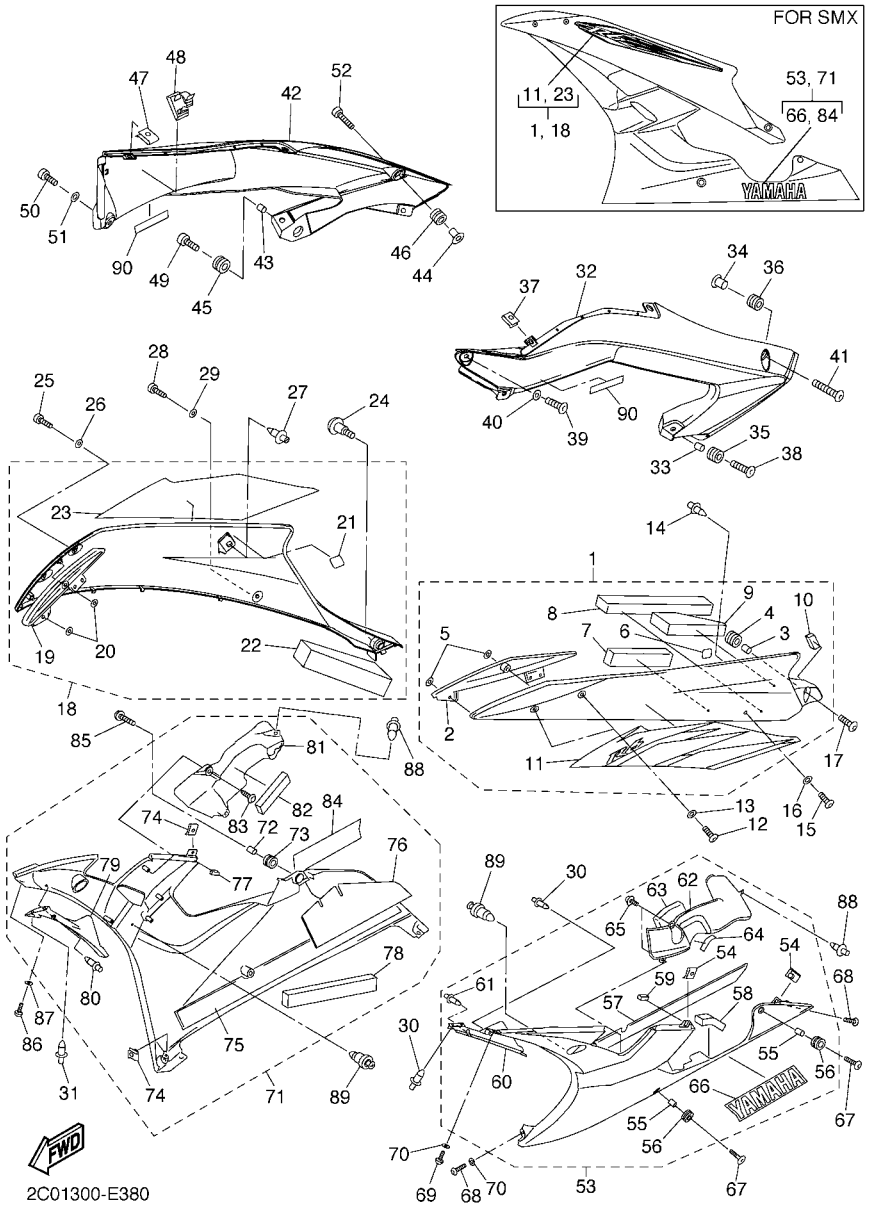

FIG. 38 BOVEDA 2

REF. Nº	CODIGO Nº	DESCRIPCION	2C01					OBSERVACIONES
1	2C0–Y283U–00–P0	PANEL 1	1					UR DPBMC
	2C0–Y283U–10–P1	PANEL 1	1					UR BWC1
	2C0–Y283U–20–P2	PANEL 1	1					UR MBL2 PARA SMX
2	2C0–28219–00	.CUBIERTA 1	1					
3	90387–06057	.ESPACIADOR	1					
4	90480–14003	.TAPON	1					
5	90183–05M02	.TUERCA DE RESORTE	2					
6	1UF–15379–00	.SELLO	1					
7	2C0–2836T–00	.AMORTIGUADOR DE MONTAJE 1	1					
8	2C0–2837J–00	.AMORTIGUADOR	1					
9	2C0–2847S–00	.AMORTIGUADOR 11	1					
10	3XV–21717–00	.AMORTIGUADOR	1					
11	2C0–28391–00	.CALCOMANIA DE BOVEDA 1	1					UR PARA DPBMC
	2C0–28391–10	.CALCOMANIA DE BOVEDA 1	1					UR PARA BWC1
	2C0–28391–30	.CALCOMANIA DE BOVEDA 1	1					UR PARA SMX
12	90111–05003	TORNILLO	2					
13	90202–05180	ARANDELA DE PLANA	2					
14	90269–07007	REMACHE	1					
15	90111–05003	TORNILLO	1					
16	90202–05180	ARANDELA DE PLANA	1					
17	90111–06040	TORNILLO	1					
18	2C0–Y283V–00–P0	PANEL 2	1					UR DPBMC
	2C0–Y283V–10–P1	PANEL 2	1					UR BWC1
	2C0–Y283V–20–P2	PANEL 2	1					UR MBL2 PARA SMX
19	2C0–28229–00	.CUBIERTA 2	1					
20	90183–05M02	.TUERCA DE RESORTE	2					
21	1UF–15379–00	.SELLO	1					

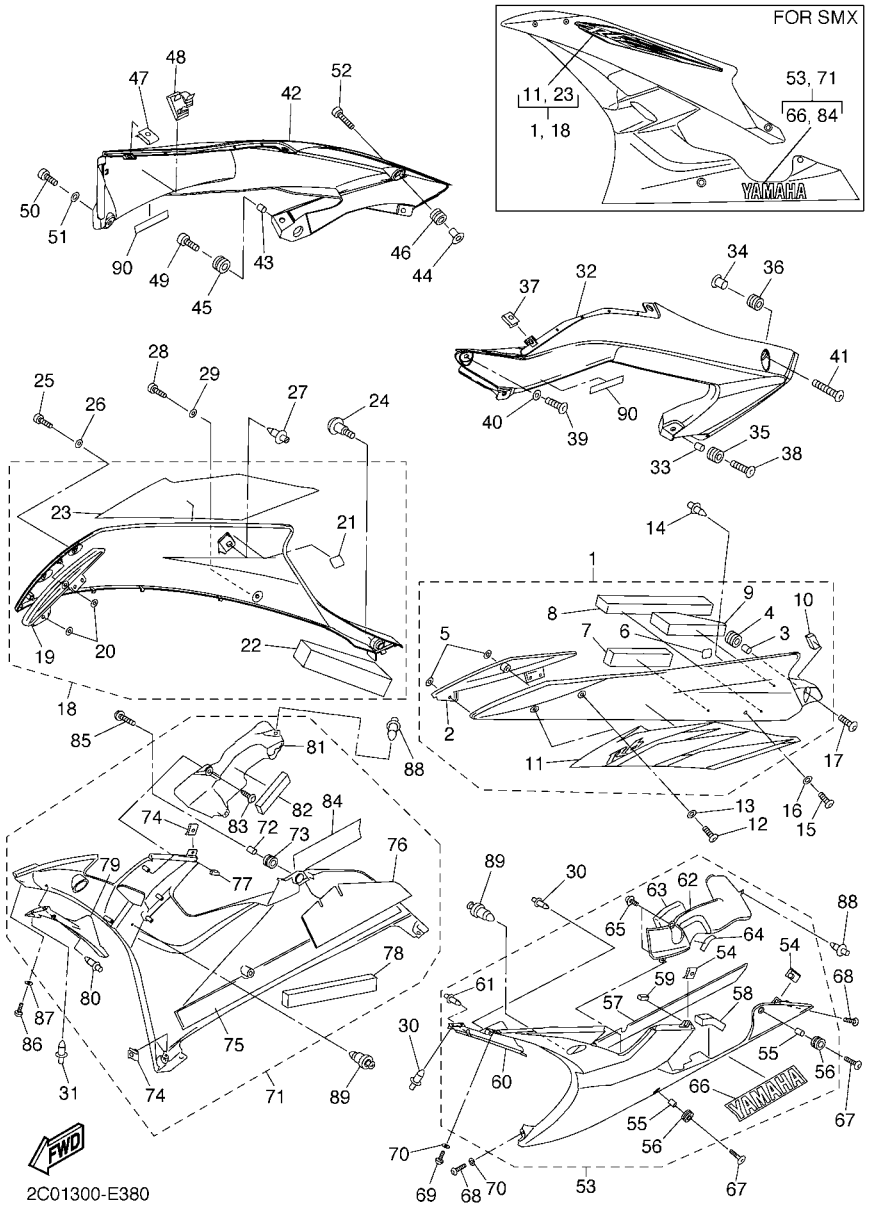

FIG. 38 BOVEDA 2

REF. Nº	CODIGO Nº	DESCRIPCION	2C01					OBSERVACIONES
22	2C0–2837K–00	.AMORTIGUADOR 6	1					
23	2C0–28392–00	.CALCOMANIA DE BOVEDA 2	1					UR PARA DPBMC
	2C0–28392–10	.CALCOMANIA DE BOVEDA 2	1					UR PARA BWC1
	2C0–28392–30	.CALCOMANIA DE BOVEDA 2	1					UR PARA SMX
24	90109–06078	PERNO	1					
25	90111–05003	TORNILLO	2					
26	90202–05180	ARANDELA DE PLANA	2					
27	90269–07007	REMACHE	1					
28	90111–05003	TORNILLO	1					
29	90202–05180	ARANDELA DE PLANA	1					
30	90269–06008	REMACHE	3					
31	90269–06008	REMACHE	2					
32	2C0–2117V–00–P0	CUBIERTA 7	1					UR DPBMC
	2C0–2117V–00–P1	CUBIERTA 7	1					UR BWC1
	2C0–2117V–00–P2	CUBIERTA 7	1					UR SMX
33	90387–06057	ESPACIADOR	1					
34	90387–067K8	ESPACIADOR	1					
35	90480–14003	TAPON	1					
36	90480–12613	TAPON	1					
37	90183–05076	TUERCA DE RESORTE	1					
38	90111–06040	TORNILLO	1					
39	90111–05003	TORNILLO	1					
40	90202–05180	ARANDELA DE PLANA	1					
41	90111–06063	TORNILLO	1					
42	2C0–2117W–00–P0	CUBIERTA 8	1					UR DPBMC
	2C0–2117W–00–P1	CUBIERTA 8	1					UR BWC1
	2C0–2117W–00–P2	CUBIERTA 8	1					UR SMX

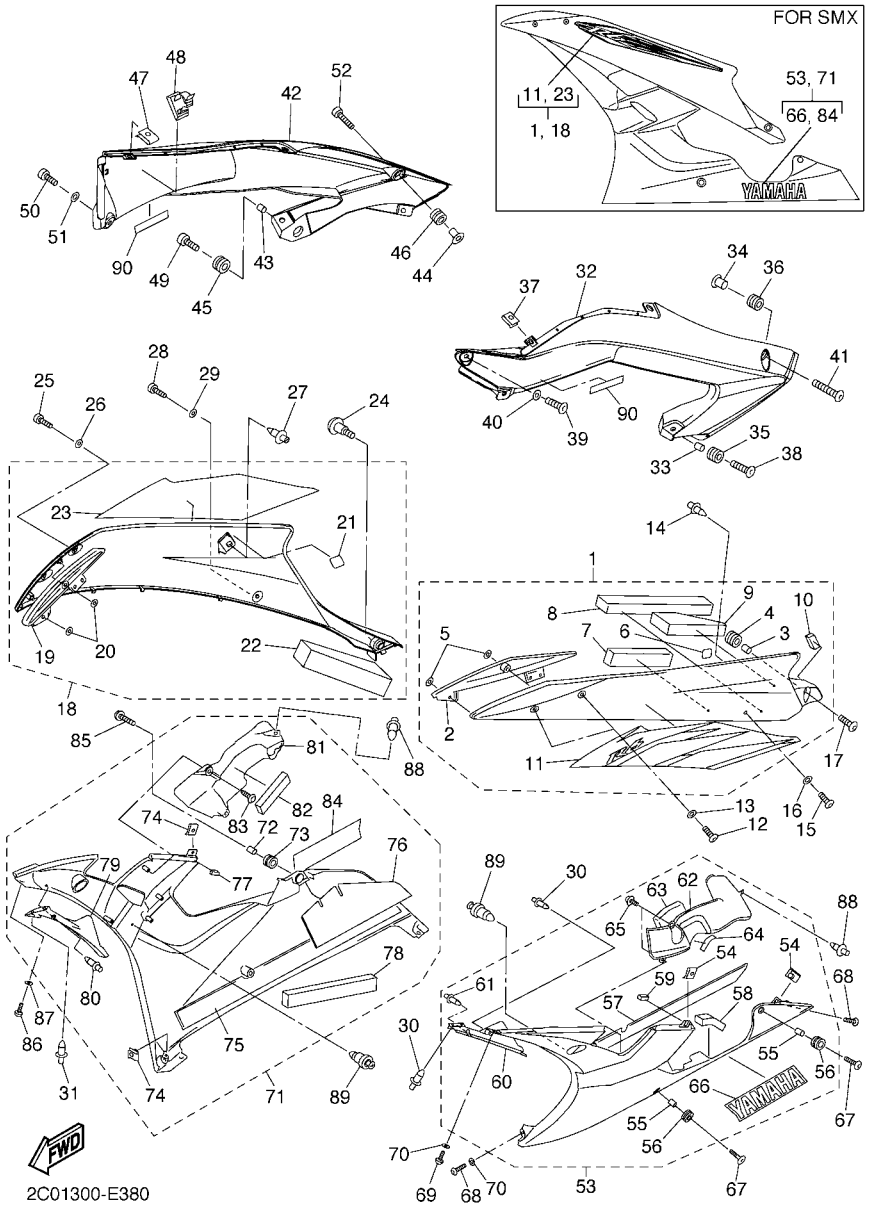

FIG. 38 BOVEDA 2

REF. Nº	CODIGO Nº	DESCRIPCION	2C01					OBSERVACIONES
43	90387–06057	ESPACIADOR	1					
44	90387–067K8	ESPACIADOR	1					
45	90480–14003	TAPON	1					
46	90480–12613	TAPON	1					
47	90183–05076	TUERCA DE RESORTE	1					
48	90464–13007	BRIDA	1					
49	90111–06040	TORNILLO	1					
50	90111–05003	TORNILLO	1					
51	90202–05180	ARANDELA DE PLANA	1					
52	90111–06063	TORNILLO	1					
53	2C0–Y2808–00–P3	CUBIERTA, INFERIOR	1					MBL2 PARA DPBMC
	2C0–Y2808–00–P1	CUBIERTA, INFERIOR	1					VRC1 PARA BWC1
	2C0–Y2808–10–P2	CUBIERTA, INFERIOR	1					SMX
54	90183–05076	.TUERCA DE RESORTE	2					
55	90387–06057	.ESPACIADOR	2					
56	90480–14003	.TAPON	2					
57	2C0–2838G–00	.ASIENTO	1					
58	2C0–2836U–00	.AMORTIGUADOR DE UBICACION 2	1					
59	2C0–2847N–00	.AMORTIGUADOR 8	1					
60	2C0–2836L–00	.PANEL 2	1					
61	90269–06008	.REMACHE	1					
62	2C0–2838U–00	.CONDUCTO 4	1					
63	2C0–2834F–00	.AMORTIGUADOR	1					
64	1LJ–2414J–00	.EQUILIBRIO, CUBIERTA	1					
65	90164–05014	.TORNILLO ROSCA HEMBRA	2					
66	99241–00240	.EMBLEMA, YAMAHA	1					PARA DPBMC,BWC1
	99247–00240	.EMBLEMA, YAMAHA	1					PARA SMX

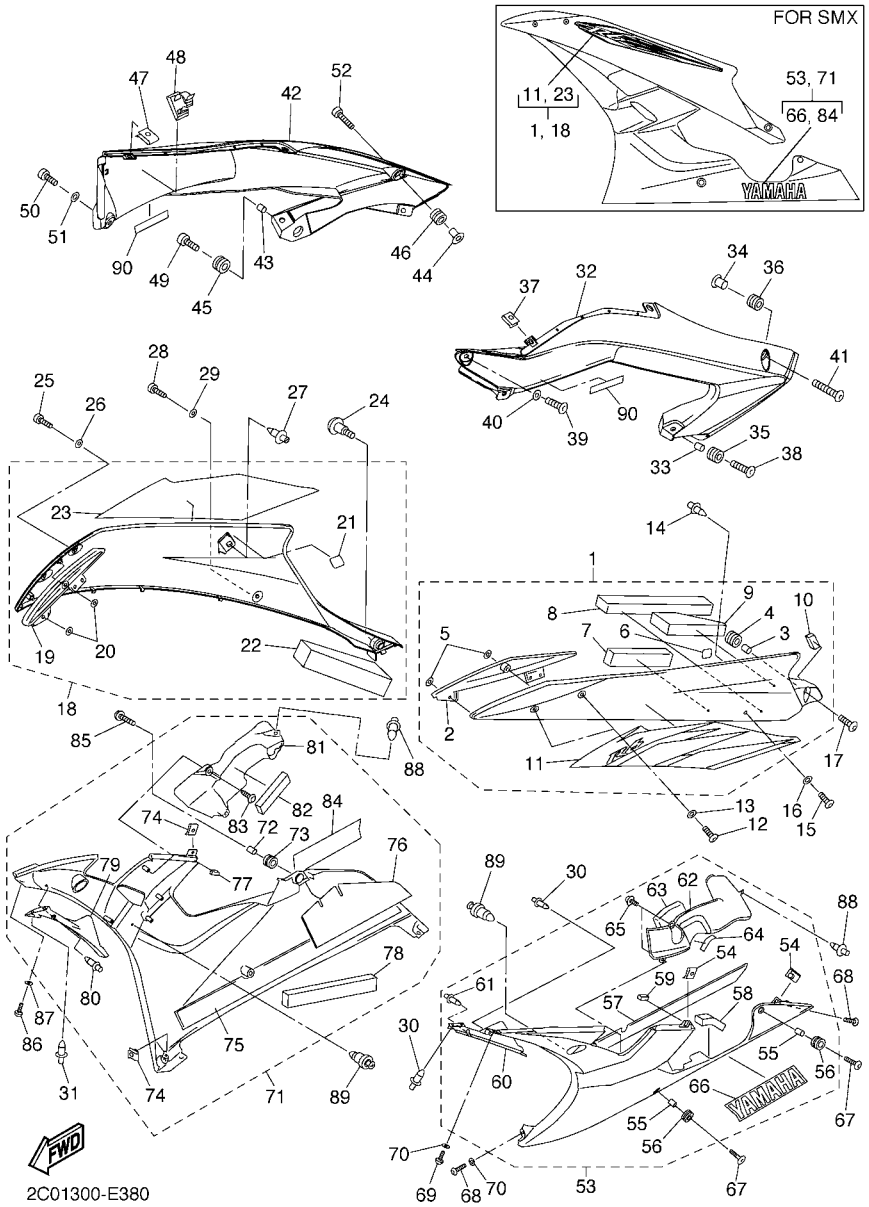

FIG. 38 BOVEDA 2

REF. Nº	CODIGO Nº	DESCRIPCION	2C01					OBSERVACIONES
67	90111–06040	TORNILLO	2					
68	90111–05003	TORNILLO	2					
69	90111–05003	TORNILLO	1					
70	90202–05180	ARANDELA DE PLANA	2					
71	2C0–Y2809–00–P3	CUBIERTA, INFERIOR	1					MBL2 PARA DPBMC
	2C0–Y2809–00–P1	CUBIERTA, INFERIOR	1					VRC1 PARA BWC1
	2C0–Y2809–10–P2	CUBIERTA, INFERIOR	1					SMX
72	90387–06057	.ESPACIADOR	1					
73	90480–14003	.TAPON	1					
74	90183–05076	.TUERCA DE RESORTE	2					
75	2C0–2848K–00	.ASIENTO 2	1					
76	2C0–2848H–00	.ASIENTO	1					
77	2C0–2847P–00	.AMORTIGUADOR 9	1					
78	2C0–2847R–00	.AMORTIGUADOR 10	1					
79	2C0–2836M–00	.PANEL 3	1					
80	90269–06008	.REMACHE	1					
81	2C0–2838J–00	.CONDUCT0 5	1					
82	2C0–2834E–00	.AMORTIGUADOR 1	1					
83	90164–05014	.TORNILLO ROSCA HEMBRA	2					
84	99241–00240	.EMBLEMA, YAMAHA	1					PARA DPBMC,BWC1
	99247–00240	.EMBLEMA, YAMAHA	1					PARA SMX
85	90111–06040	TORNILLO	1					
86	90111–05003	TORNILLO	1					
87	90202–05180	ARANDELA DE PLANA	1					
88	90269–06008	REMACHE	2					
89	90269–06081	REMACHE	2					
90	2C0–21737–00	EMBLEMA	2					PARA DPBMC

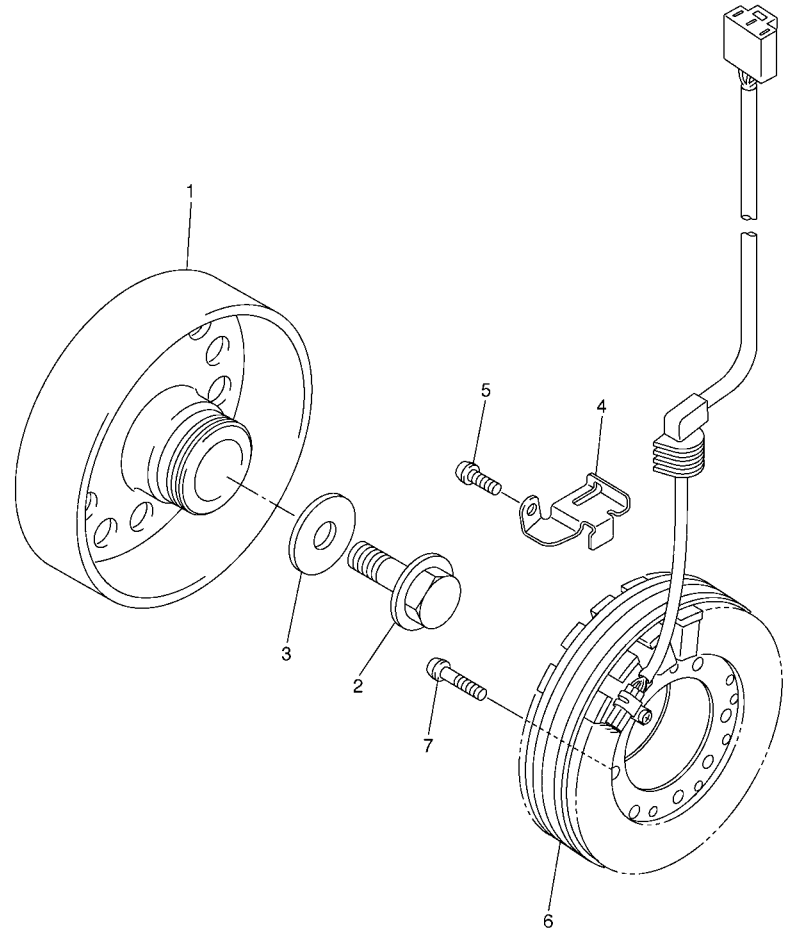

2C01300-E390

FIG. 39 GENERADOR

REF. Nº	CODIGO Nº	DESCRIPCION	2C01					OBSERVACIONES
1	2C0–81450–00	ROTOR COMPLETO	1					
2	90105–126A8	TORNILLO	1					
3	90201–12008	ARANDELA PLANA	1					
4	2C0–15484–00	GRAMPA 2	1					
5	90149–06082	TORNILLO DE REGLAJE	1					
6	2C0–81410–00	ESTATOR COMPLETO	1					
7	90149–06080	TORNILLO DE REGLAJE	3					

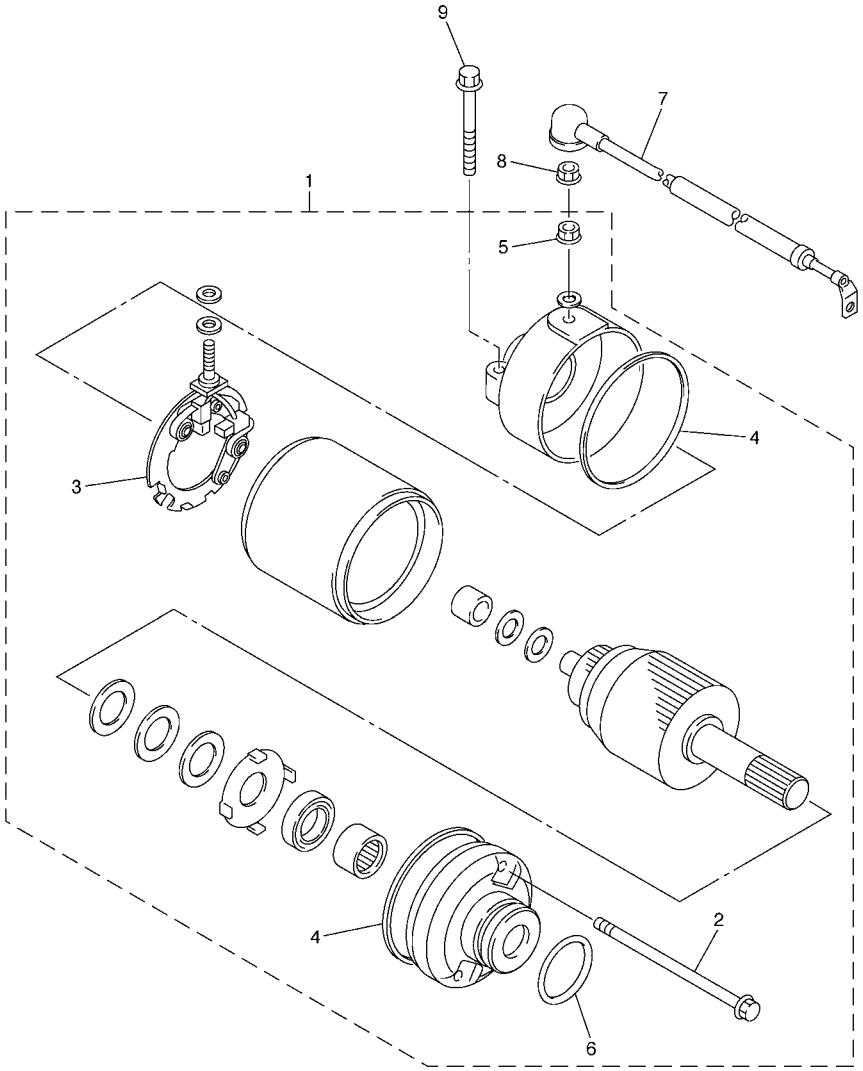

2C01300-E400

FIG. 40 MOTOR DE ARRANQUE

REF. Nº	CODIGO Nº	DESCRIPCION	2C01					OBSERVACIONES
1	2C0–81890–00	MOTOR DE ARRANQUE COMPLETO	1					
2	4WP–81826–00	.PERNO	2					
3	4WP–81801–00	.JUEGO DE ESCOBILLA	1					
4	4WP–81844–00	.EMPAQUE	2					
5	4XV–8182A–00	.TUERCA	1					
6	1FK–81847–00	.ANILLO GOMA	1					
7	2C0–81815–00	CABLE, MOTOR DE ARRANQUE	1					
8	4XV–8182A–00	TUERCA	1					
9	90105–06083	TORNILLO	2					

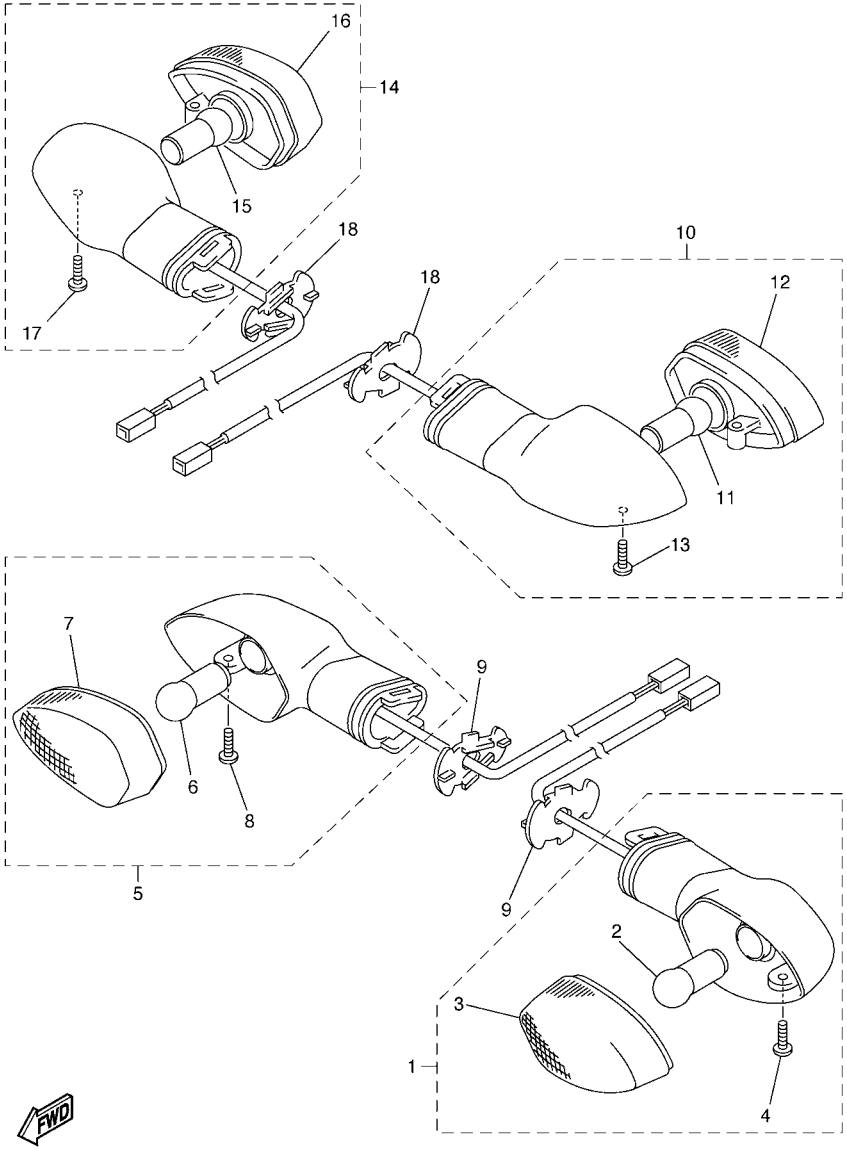

FIG. 41 LUZ DE DESTELLADOR

REF. Nº	CODIGO Nº	DESCRIPCION	2C01					OBSERVACIONES
1	2C0–83310–00	DESTELLADOR DE LUZ DELANT.	1					
2	2C0–83311–00	.BOMBILLA (12V-10W)	1					
3	2C0–8333A–00	.LENTES COMPLETO	1					
4	97702–40010	.TORNILLO ROSCA HEMBRA	1					
5	2C0–83320–00	DESTELLADOR DE LUZ DELANT.	1					
6	2C0–83311–00	.BOMBILLA (12V-10W)	1					
7	2C0–8334A–00	.LENTES COMPLETO	1					
8	97702–40010	.TORNILLO ROSCA HEMBRA	1					
9	2C0–83318–00	SOPORTE DE DESTELLADOR 1	2					
10	2C0–83330–00	DESTELLADOR DE LUZ TRAS.COMPL.	1					
11	2C0–83311–00	.BOMBILLA (12V-10W)	1					
12	2C0–8334A–00	.LENTES COMPLETO	1					
13	97702–40010	.TORNILLO ROSCA HEMBRA	1					
14	2C0–83340–00	DESTELLADOR DE LUZ TRAS.COMPL.	1					
15	2C0–83311–00	.BOMBILLA (12V-10W)	1					
16	2C0–8333A–00	.LENTES COMPLETO	1					
17	97702–40010	.TORNILLO ROSCA HEMBRA	1					
18	2C0–83318–00	SOPORTE DE DESTELLADOR 1	2					

FIG. 42 MEDIDOR

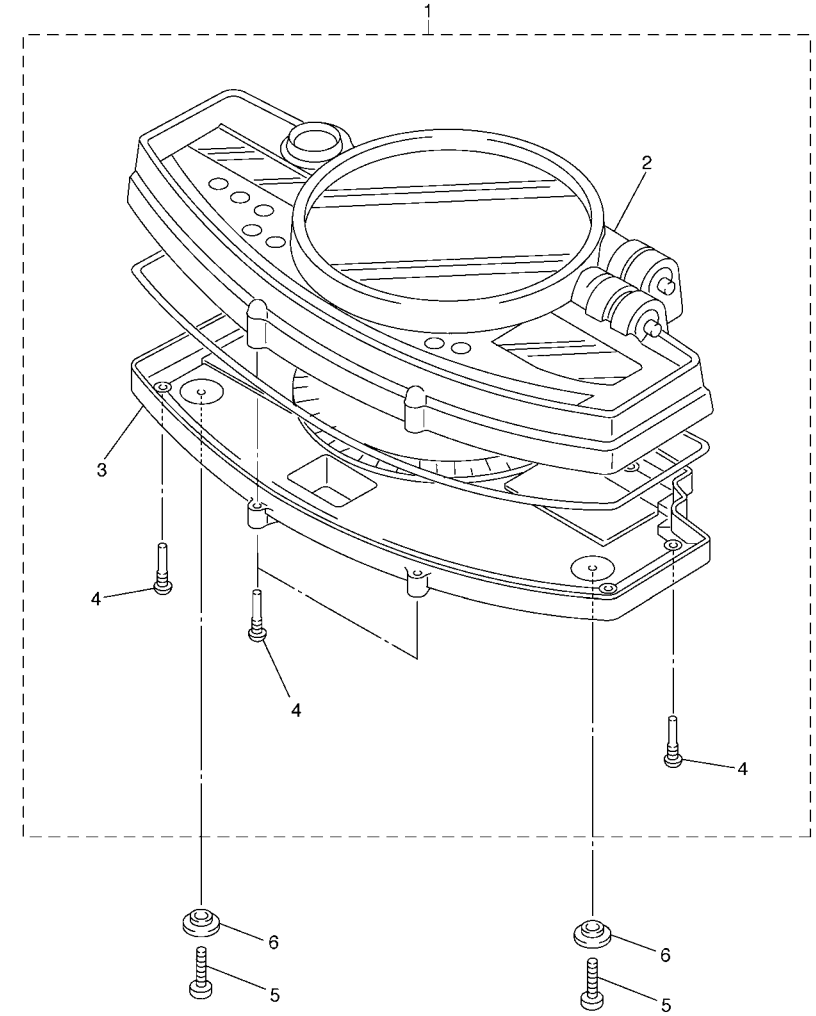

2C01300-E420

REF. Nº	CODIGO Nº	DESCRIPCION	2C01					OBSERVACIONES
1	2C0–83500–00	VELOCIMETRO COMPLETO (KM/H)	1					
2	5VY–8353E–00	.CAJA DE MEDIDOR SUPERIOR	1					
3	5VY–83572–00	.CAJA DE VELOCIMETRO INFERIOR	1					
4	5PW–8352S–00	.TORNILLO	11					
5	97707–50016	TORNILLO	3					
6	90387–05030	ESPACIADOR	3					

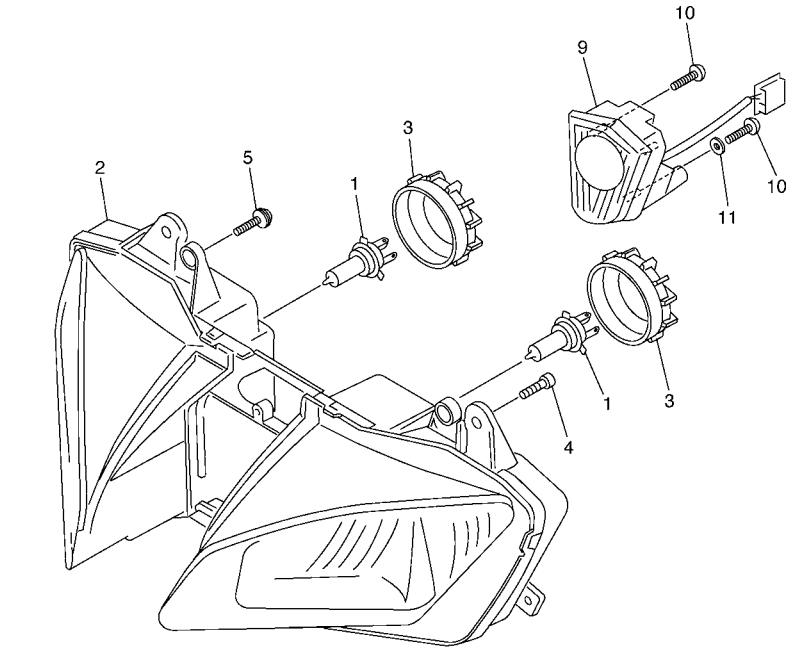

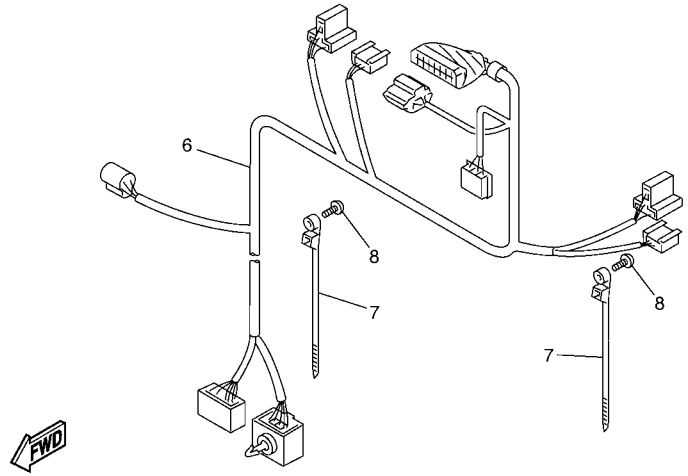

2C01300-E430

FIG. 43 FARO DELANTERO

REF. Nº	CODIGO Nº	DESCRIPCION	2C01					OBSERVACIONES
1	4SV–84314–00	BOMBILLA (12V-55W)	2					(H7)HALOGEN
2	2C0–84303–00	UNIDAD DE FARO DELANTERO COMPL	1					
3	5SL–84397–00	CUBIERTA DE ENCASTRE	2					
4	97707–50016	TORNILLO	5					
5	90160–05006	TORNILLO REDONDO ROSCA HEMBRA	4					
6	2C0–84359–00	CABLE DE FARO DELANTERO	1					
7	90464–47001	BRIDA	2					
8	97707–50016	TORNILLO	2					
9	2C0–84301–00	LUZ PILOTO COMPLETA 1	1					
10	97707–40016	TORNILLO ROSCA HEMBRA	3					
11	90201–047A2	ARANDELA PLANA	1					

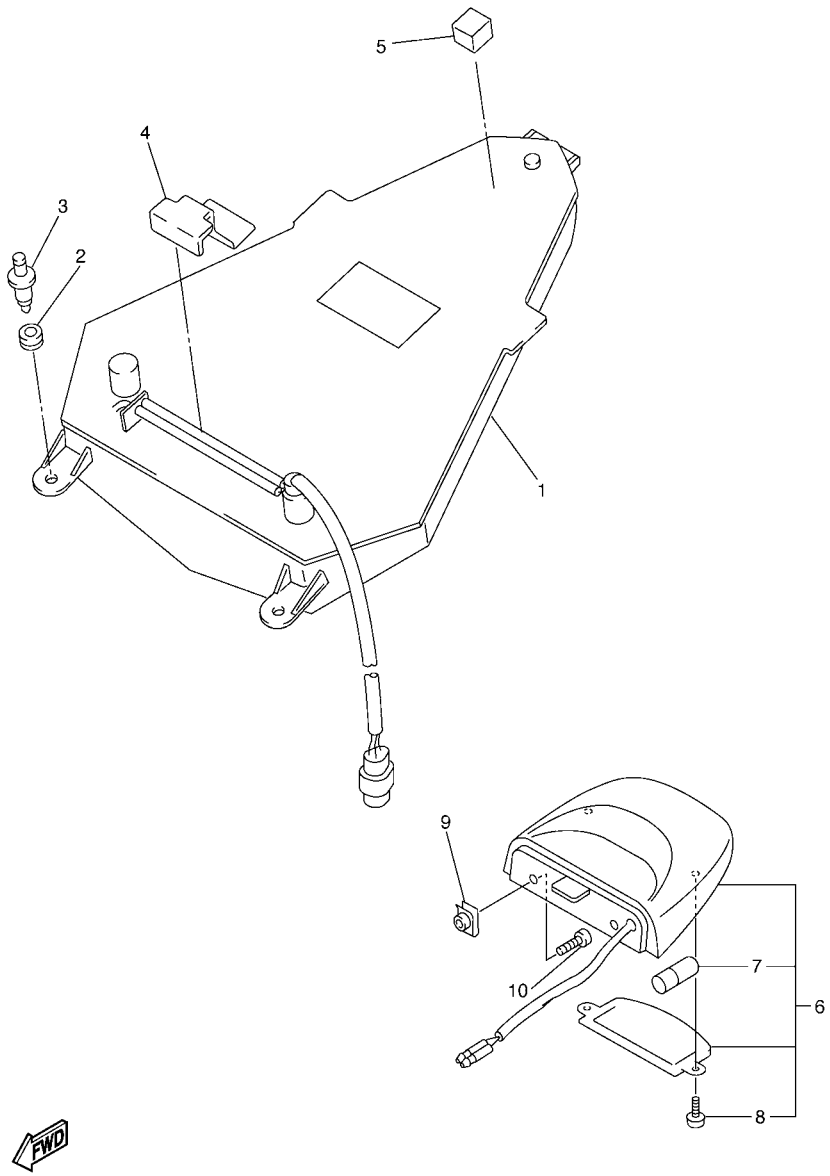

2C01300-E440

FIG. 44 LUZ DE COLA

REF. Nº	CODIGO Nº	DESCRIPCION	2C01					OBSERVACIONES
1	2C0–84710–00	UNIDAD FARO TRASERO COMPL.	1					
2	5SL–84753–00	AMORTIGUADOR	2					
3	90269–06001	REMACHE	2					
4	2C0–2163F–00	CUBIERTA TRAS GUARDABARRO 3	1					
5	4HM–21638–00	AMORTIGUADOR 1	1					
6	5VX–84745–01	UNIDAD DE LUZ DE LICENCIA COMP	1					
7	4HC–84744–00	.BOMBILLA (12V-5W)	1					
8	97706–04012	.TORNILLO, ROSCA CHAPA	2					
9	90183–05061	TUERCA DE RESORTE	2					
10	98907–05012	TORNILLO DE LIGAR	2					

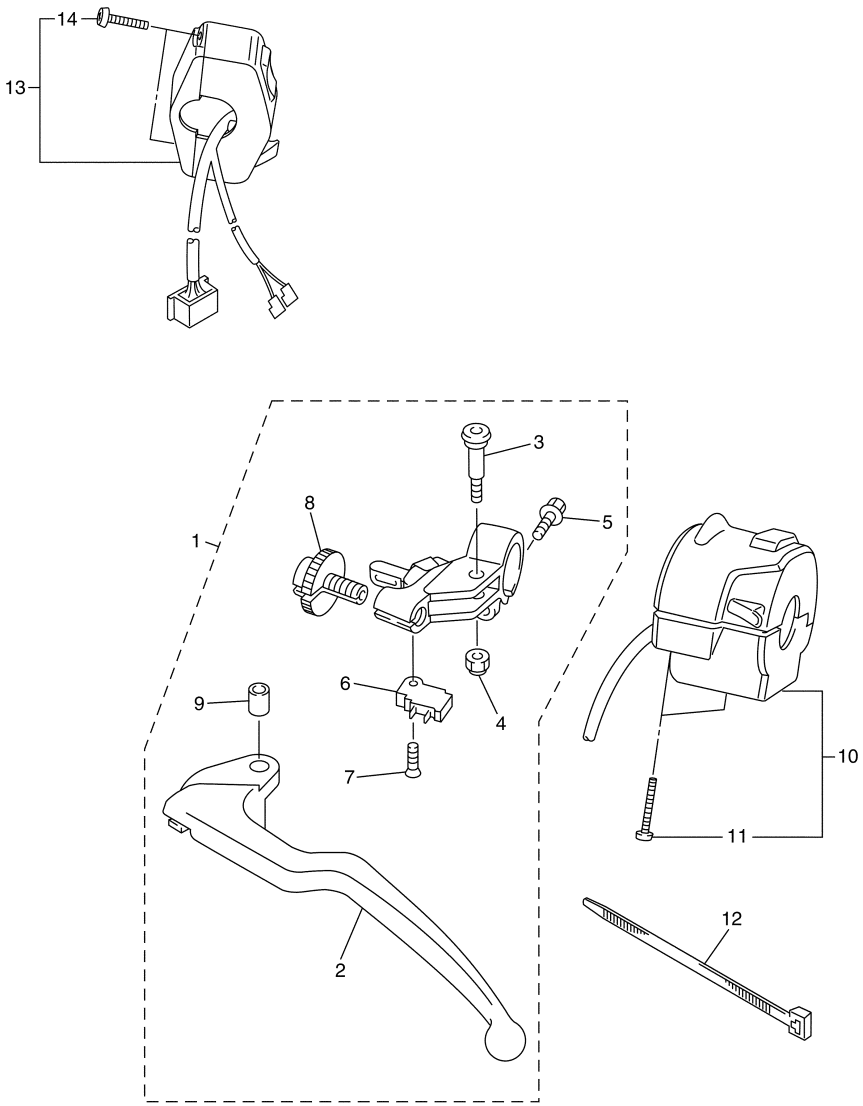

2C01300-E451

FIG. 45 INTERRUPTOR DE MANILLAR&PALANC

REF. Nº	CODIGO Nº	DESCRIPCION	2C01					OBSERVACIONES
1	2C0–82910–00	SOPORTE DE LEVA COMPLT 1	1					
2	5EB–83912–02	.PALANCA 1	1					
3	2C0–83945–00	.PERNO DE PALANCA	1					
4	95607–06200	.TUERCA DE AUTO-CIERRE	1					
5	95027–06020	.PERNO, DE BRIDA	1					
6	4XV–82917–01	.INTERRUPTOR	1					
7	98707–03016	.TORNILLO DE CABEZA PLANA	1					
8	5LV–83951–00	.PERNO DE CABLE DE AJUSTE	1					
9	5JJ–83913–00	.COLLAR DE PALANCA 1	1					
10	2C0–83969–00	INTERRUPTOR DE MANIJA 5	1					
11	98507–05035	.TORNILLO DE CABEZA PLANA	2					
12	3MA–82591–00	BANDA	1					
13	2C0–83975–00	INTERRUPTOR DE MANIJA 2	1					
14	98507–05022	.TORNILLO DE CABEZA PLANA	2					

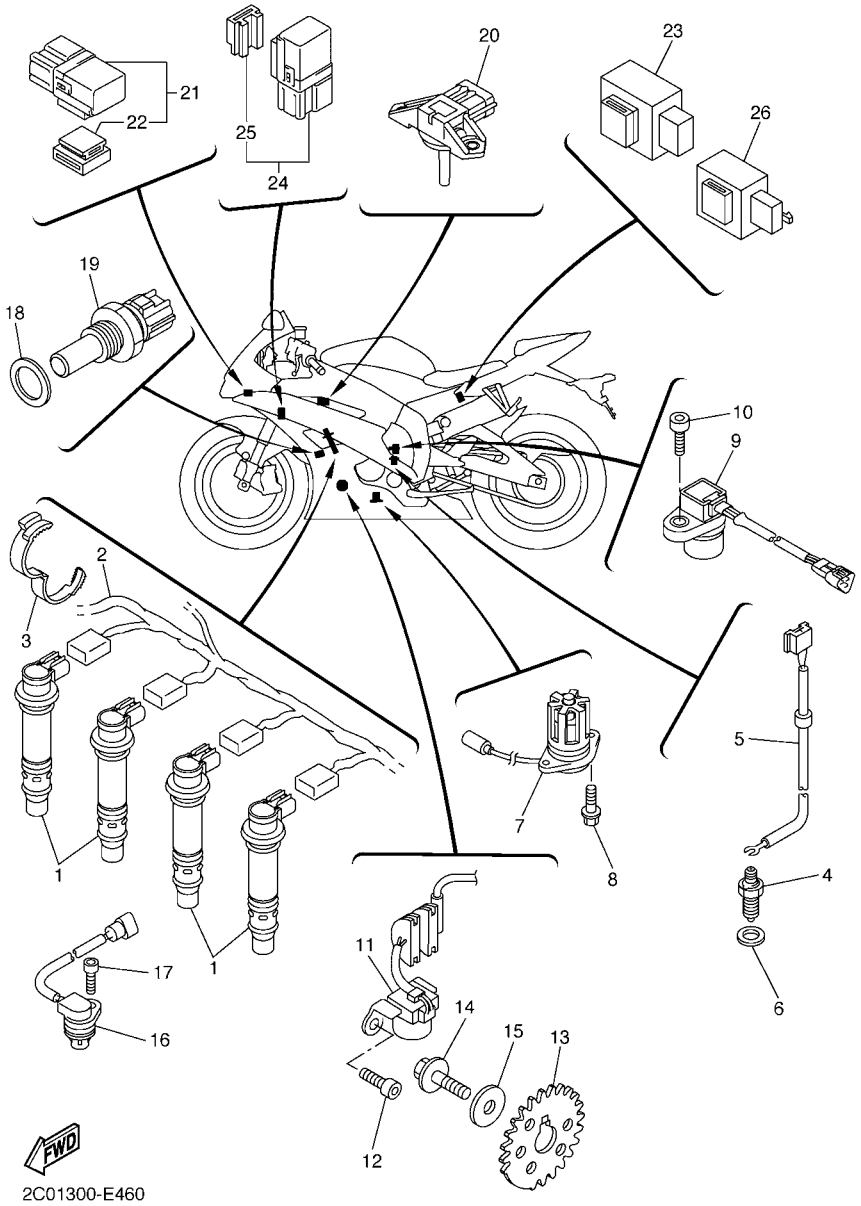

FIG. 46 EQUIPO ELECTRICO 1

REF. Nº	CODIGO Nº	DESCRIPCION	2C01					OBSERVACIONES
1	2C0–82310–00	BOBINA DE ENCENDIDO COMPLETA	4					
2	2C0–82309–00	CABLE SUBCONDUCTOR	1					
3	90464–28003	BRIDA	1					
4	3GB–82540–01	INTERRUPTOR NEUTRAL COMPL	1					
5	2C0–82541–00	CABLE CONDUCTOR	1					
6	90430–10148	JUNTA	1					
7	5VX–85720–01	MEDIDOR DE NIVEL DE ACEITE	1					
8	95022–06016	PERNO, DE BRIDA	2					
9	4WM–83755–01	SENSOR DE VELOCI	1					
10	91312–06016	TORNILLO	1					
11	2C0–81670–00	RECOGEDOR COMPL.	1					
12	90110–06168	TORNILLO ALLEN	2					
13	2C0–81673–00	ROTOR	1					
14	90105–08113	TORNILLO	1					
15	90201–08054	ARANDELA PLANA	1					
16	5VY–85896–00	SENSOR DE LEVA	1					
17	90110–06175	TORNILLO ALLEN	1					
18	90201–12790	ARANDELA PLANA	1					
19	8CC–85790–01	TERMICA SENSORIO	1					
20	2C0–82380–10	SENSOR DE PRESION	1					
21	5JJ–81950–20	RELE COMPLETO	2					
22	5JJ–81952–00	.SOSTEN DE RELE	1					
23	5VK–81950–40	RELE COMPLETO	1					
24	5EA–81950–20	RELE COMPLETO	1					
25	5EA–81952–00	.SOSTEN DE RELE	1					
26	4GY–83350–00	RELE DE DESTELLADOR COMPL.	1					

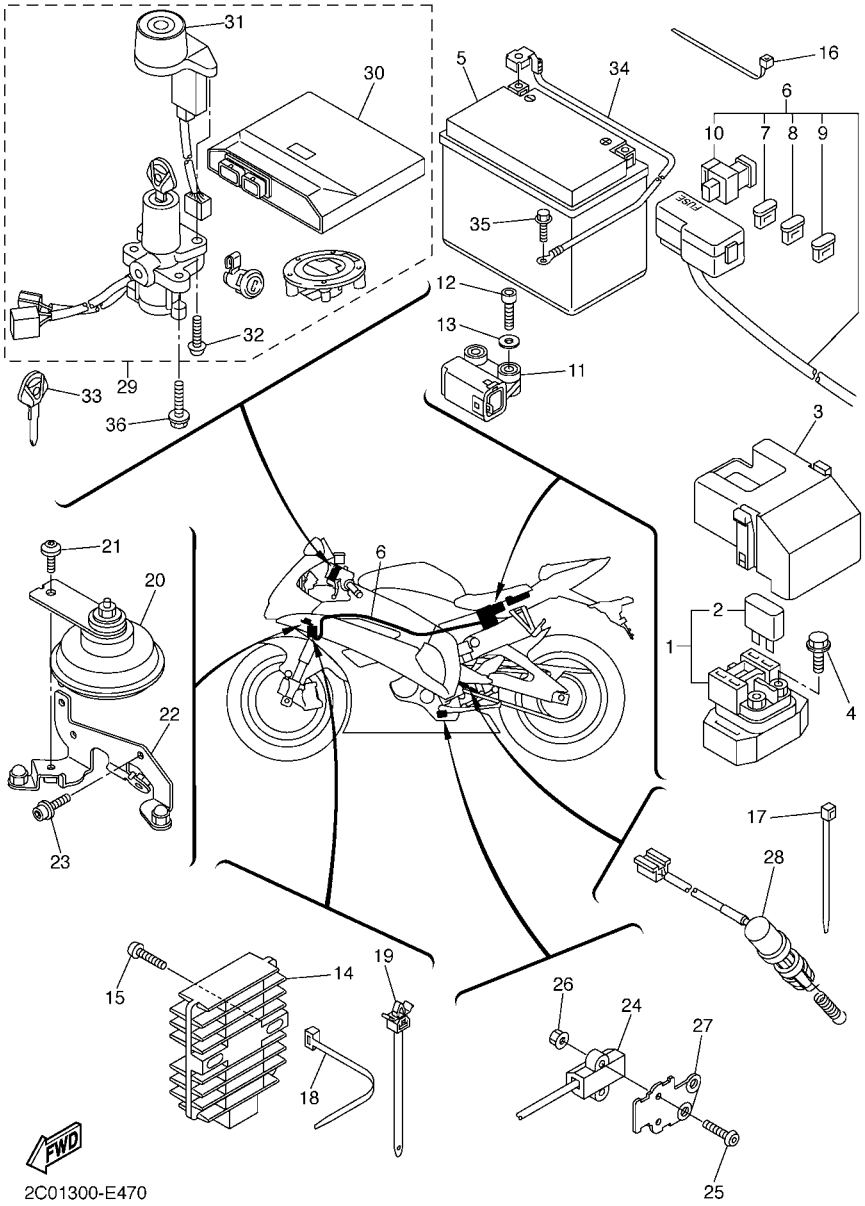

FIG. 47 EQUIPO ELECTRICO 2

REF. Nº	CODIGO Nº	DESCRIPCION	2C01					OBSERVACIONES
1	2C0–81940–00	CONJUNTO ARRANCADOR RELEVO	1					
2	36Y–82151–00	.FUSIBLE (15A-BL)	2					
3	5SL–82119–10	CUBIERTA DE CABLE CONDUCTOR	1					
4	95022–06008	PERNO, DE BRIDA	2					
5	5VY–82100–00	BATERIA COMPLETA(YUASA YTZ10S)	1					
6	2C0–82590–00	CONJUNTO DE CABLES	1					
7	5JJ–82151–10	.FUSIBLE (15A-BL)	5					
8	5JJ–82151–00	.FUSIBLE (7.5A-BL)	4					
9	5JJ–82151–30	.FUSIBLE (10A-BL)	2					
10	5JW–82151–10	.FUSIBLE (50A)	1					
11	5PS–82576–01	SENSOR ANGULO DE INCLINATION	1					
12	91317–04025	PERNO	2					
13	90201–042E0	ARANDELA PLANA	2					
14	4XY–81960–00	RECTIFICADOR Y REGULADOR	1					
15	92017–06025	PERNO	2					
16	90465–15011	BRIDA	2					
17	90464–32060	BRIDA	2					
18	90464–16061	BRIDA	4					
19	90464–12036	BRIDA	2					
20	4TH–83371–00	BOCINA	1					
21	90149–06298	TORNILLO DE REGLAJE	1					
22	2C0–23377–00	SOPORTE DE BOCINA	1					
23	90110–06122	TORNILLO ALLEN	2					
24	5PX–82566–72	INTERRUPTOR	1					
25	92017–05025	PERNO	2					
26	95607–05200	TUERCA DE AUTO-CIERRE	2					
27	2C0–27961–00	SOPORTE	1					

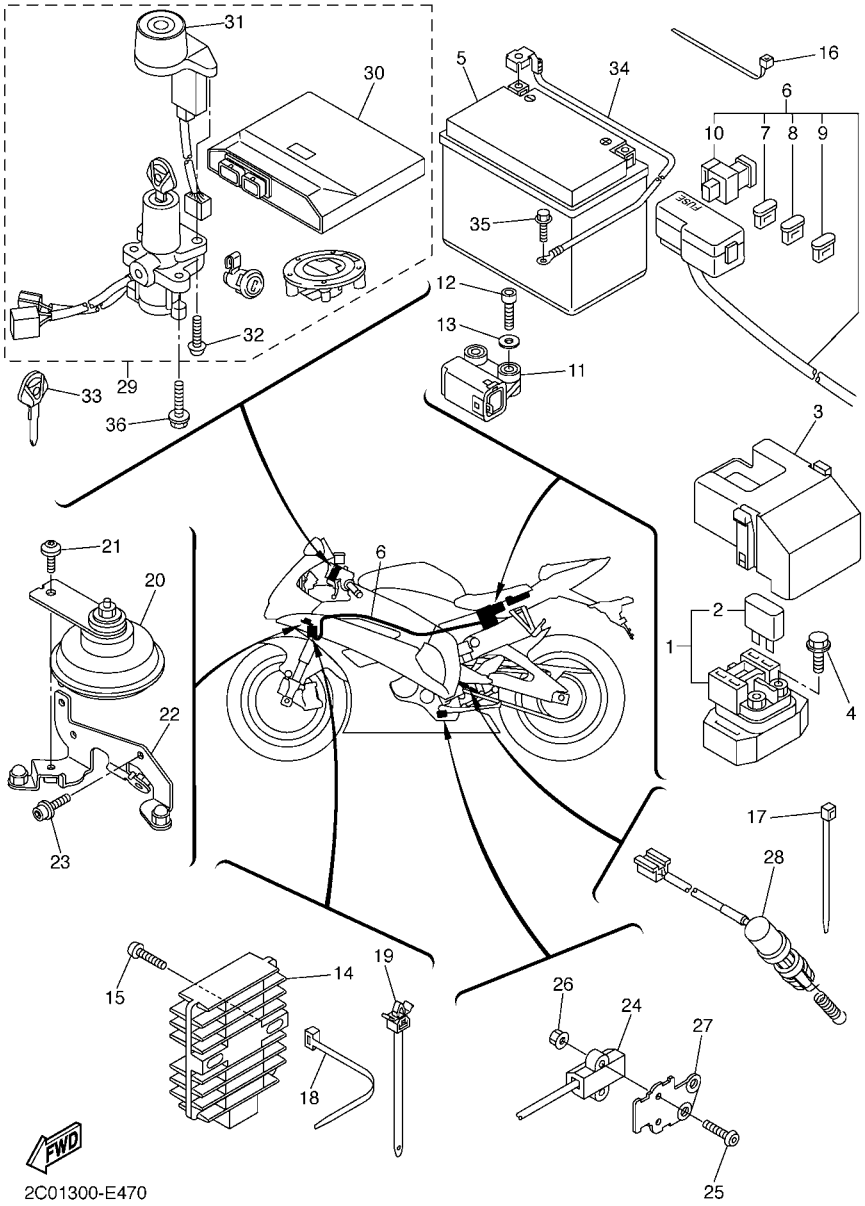

FIG. 47 EQUIPO ELECTRICO 2

REF. Nº	CODIGO Nº	DESCRIPCION	2C01					OBSERVACIONES
28	2C0–82530–00	INTERRUPTOR DE PARADA COMPLETO	1					
29	2C0–W8250–00	JUEGO DE INMOVILIZADOR	1					
30	2C0–8591A–00	.UNIDAD CONTROL	1					
31	2C0–8255P–00	.UNIDAD INMOVILIZADORA	1					
32	5SL–82113–00	.TORNILLO	2					
33	5SL–82511–08	BLANK KEY	1					AP
34	2C0–82116–00	CABLE CONDUCTOR NEGATIVO	1					
35	91380–06012	PERNO	1					
36	90109–080G5	PERNO	2					

INDICE NUMERICO

CODIGO Nº	REF. Nº
2C0–11101–00	B – 2
5VY–1111G–00	B – 2
2C0–11133–10	B – 2
2C0–11134–10	B – 2
2C0–11165–00	C – 5
2C0–11181–00	B – 2
2C0–11191–00	B – 2
2C0–11193–00	B – 2
214–11198–01	B – 12
2C0–1133E–00	C – 3
2C0–1133F–00	C – 3
2C0–11411–00	B – 3
2C0–11416–00	B – 3
2C0–11416–10	B – 3
2C0–11416–20	B – 3
2C0–11416–30	B – 3
2C0–11416–40	B – 3
2C0–11603–00	B – 3
2C0–11631–00	B – 3
2C0–11633–00	B – 3
2C0–11650–00	B – 3
2C0–11654–00	B – 3
2C0–11656–00	B – 3
2C0–11656–10	B – 3
2C0–11656–20	B – 3
2C0–11656–30	B – 3
2C0–12111–00	B – 4
2C0–12113–00	B – 4
2C0–12114–00	B – 4
2C0–12116–00	B – 4
2C0–12117–00	B – 4
1WG–12118–00	B – 4
4SV–12119–00	B – 4
2C0–12121–00	B – 4
5EB–12153–09	B – 5
5EB–12153–20	B – 5
5EB–12153–30	B – 5
1HX–12168–00	B – 4
1HX–12168–20	B – 4
1HX–12168–40	B – 4
1HX–12168–60	B – 4
1HX–12168–80	B – 4
1HX–12168–A0	B – 4
1HX–12168–F0	B – 4
1HX–12168–H1	B – 4
1HX–12168–K1	B – 4
1HX–12168–M1	B – 4
1HX–12168–R1	B – 4

CODIGO Nº	REF. Nº
1HX–12168–U1	B – 4
1HX–12168–W1	B – 4
1HX–12168–Y1	B – 4
1HX–12169–11	B – 4
1HX–12169–31	B – 4
1HX–12169–50	B – 4
1HX–12169–70	B – 4
1HX–12169–90	B – 4
1HX–12169–E0	B – 5
1HX–12169–G0	B – 5
1HX–12169–J0	B – 5
1HX–12169–L0	B – 5
1HX–12169–N0	B – 5
1HX–12169–T0	B – 5
2C0–12170–00	B – 6
2C0–12176–00	B – 6
2C0–12180–00	B – 6
2C0–12210–00	B – 6
2C0–12213–00	B – 6
5BE–12241–00	B – 2
2C0–12251–00	B – 6
2C0–12252–00	B – 6
2C0–12405–00	B – 8
2C0–12405–10	B – 8
5SL–12410–00	B – 8
2C0–12413–00	B – 8
2C0–12420–00	B – 7
2C0–1243A–00	B – 7
2C0–1243F–00	B – 9
2C0–1244E–00	B – 8
2C0–12461–00	B – 8
5SL–12462–00	B – 8
5EB–12469–00	B – 7
2C0–1246H–00	B – 10
2C0–12481–00	B – 8
2C0–12491–00	B – 9
2C0–12535–00	B – 8
2C0–12551–00	B – 9
2C0–12552–00	B – 8
2C0–12576–00	B – 7
2C0–12577–00	B – 7
2C0–12578–00	B – 8
2C0–12579–00	B – 9
2C0–12581–00	B – 7
2C0–12582–00	B – 9
2C0–12588–00	B – 7
2C0–12589–00	B – 9
2C0–12659–00	B – 8

CODIGO Nº	REF. Nº
2C0–12668–00	B – 8
5GJ–12675–00	B – 8
2C0–12682–00	B – 14
5EB–12822–00	B – 12
2C0–13160–00	B – 15
5EB–13161–00	B – 11
2C0–1316E–00	B – 11
2C0–13300–00	B – 11
4SV–13310–00	B – 11
2C0–13410–00	B – 11
2C0–13414–00	B – 12
2C0–13415–00	B – 11
2C0–13416–00	B – 11
2C0–13417–00	B – 12
5VX–13418–00	C – 5
5GH–13440–20	B – 12
2C0–13470–00	B – 12
5JW–13473–00	B – 12
5EB–13475–00	B – 12
2C0–13490–00	B – 12
2C0–13532–00	B – 15
68V–13533–00	B – 15
8FP–13556–00	B – 15
2C0–13586–00	B – 13
2C0–13596–00	B – 13
2C0–13750–00	B – 15
2C0–13761–00	B – 15
2C0–13761–10	B – 13
2C0–13767–00	B – 13
2C0–13881–00	B – 13
2C0–13898–00	B – 11
2C0–13907–00	D – 15
2C0–13938–00	B – 13
2C0–13971–00	B – 15
2C0–13972–00	B – 15
2C0–14105–00	B – 15
4KM–14137–00	B – 15
5PS–14147–00	B – 13
	B – 15
2C0–14216–00	B – 15
5FL–14216–00	B – 15
8CC–14216–10	B – 15
3XV–14251–00	B – 15
5FL–14348–10	B – 15
2C0–14409–00	B – 13
2C0–14411–00	B – 13
2C0–14421–00	B – 13
2C0–14425–00	B – 13

CODIGO Nº	REF. Nº
2C0–14426–00	B – 14
2C0–14435–00	B – 14
2C0–14450–00	B – 13
2C0–14452–00	B – 14
2C0–14454–00	B – 14
2C0–14462–00	B – 13
2C0–14467–00	B – 13
2C0–14469–00	B – 14
2C0–1446R–00	B – 13
2C0–14476–00	B – 14
5VY–14498–00	B – 13
2C0–14610–00	C – 3
4FM–14613–00	C – 3
2C0–14618–00	C – 3
2C0–14623–00	C – 3
2C0–14718–00	C – 3
5JW–14723–00	C – 2
2C0–14725–00	C – 3
2C0–14747–00	E – 13
2C0–14753–00	C – 3
5VY–1482K–00	B – 2
2C0–14840–00	C – 2
2C0–14881–00	C – 2
2C0–14882–00	B – 13
5SL–14890–00	B – 2
5VY–14899–00	B – 2
22U–14952–00	B – 15
2C0–15100–00	C – 5
5EB–15155–00	C – 5
2C0–15163–00	C – 11
2C0–15189–00	C – 5
36Y–15189–00	C – 5
2C0–15362–00	C – 5
3F9–15362–00	C – 7
2C0–15373–00	B – 13
2C0–15377–00	C – 6
1UF–15379–00	F – 3
	F – 6
2C0–15411–00	C – 7
2C0–15413–00	C – 5
2C0–15416–00	C – 7
2C0–15418–00	C – 7
2C0–15421–00	C – 7
2C0–15441–00	C – 7
2C0–15451–00	C – 7
2C0–15456–00	C – 7
2C0–15461–00	C – 7
2C0–15462–00	C – 5

CODIGO Nº	REF. Nº
2C0–15484–00	F – 10
2C0–15512–00	C – 8
2C0–15515–00	C – 8
5MT–15521–00	C – 8
2C0–15536–00	C – 8
2C0–15580–00	C – 8
2C0–16150–00	C – 9
2C0–16154–00	C – 9
1AE–16164–00	C – 9
2C0–16164–00	C – 9
2C0–16181–00	C – 9
4FN–16321–00	C – 9
5SL–16321–00	C – 9
5LV–16321–20	C – 9
3J2–16324–00	C – 9
2C0–16340–00	C – 10
132–16346–00	C – 14
2C0–16351–00	C – 9
2C0–16356–00	C – 9
2C0–16360–00	C – 9
2C0–16370–00	C – 9
2C0–16377–00	C – 9
2C0–16382–00	C – 9
2C0–16384–00	C – 9
2C0–16539–00	C – 9
2C0–17121–00	C – 11
2C0–17131–00	C – 11
2C0–17151–00	C – 11
2C0–17161–00	C – 11
2C0–17211–00	C – 12
2C0–17221–00	C – 11
2C0–17231–00	C – 12
2C0–17241–00	C – 11
2C0–17251–00	C – 12
2C0–17261–00	C – 11
2C0–17411–00	C – 11
2C0–17421–00	C – 11
2C0–17460–00	C – 12
2C0–18101–00	C – 14
2C0–18110–00	C – 14
5PW–18112–00	C – 14
5EB–18113–00	C – 14
2C0–18115–00	C – 14
5LV–18116–00	C – 14
1D7–18127–00	C – 14
2C0–18140–00	C – 14
2C0–18144–00	C – 14
2H9–18154–00	C – 14

CODIGO Nº	REF. Nº
4XV–18154–00	C – 14
2C0–18175–00	C – 14
2C0–18511–00	C – 13
2C0–18512–00	C – 13
2C0–18513–00	C – 13
2C0–18531–00	C – 13
2C0–18535–00	C – 13
2C0–18536–00	C – 13
2C0–18540–00	C – 13
136–18542–00	C – 13
2C0–18562–00	C – 13
2C0–2110M–00	D – 2
2C0–21110–00	D – 2
2C0–21131–00	D – 5
2C0–2116J–00	C – 3
2C0–2116K–00	E – 13
2C0–2116L–00	E – 13
5VY–2117K–01	E – 3
2C0–2117V–00–P0	F – 7
2C0–2117V–00–P1	F – 7
2C0–2117V–00–P2	F – 7
2C0–2117W–00–P0	F – 7
2C0–2117W–00–P1	F – 7
2C0–2117W–00–P2	F – 7
2C0–21190–00	D – 2
2C0–21249–00	C – 2
2C0–21279–00	D – 3
2C0–21339–00	D – 14
2C0–2134F–00	E – 15
2C0–21370–00	D – 6
2C0–21376–00	D – 4
2C0–2139U–00	B – 10
2C0–2139X–00	B – 9
2C0–21414–00	D – 2
5VY–21424–00	D – 2
2C0–21435–00	D – 2
2C0–21445–00	C – 4
2C0–21446–00	C – 4
2C0–2144G–00	E – 13
2C0–21485–00	E – 12
2C0–21486–00	D – 2
2C0–21511–00–P0	D – 4
2C0–21511–00–P1	D – 4
2C0–21511–00–P2	D – 4
2C0–21541–00	D – 4
2C0–21566–00	D – 3
	D – 14
2C0–21567–00	D – 3

INDICE NUMERICO

CODIGO Nº	REF. Nº
5PA–21568–00	E – 2
2C0–21611–00–P0	D – 4
2C0–21611–00–P1	D – 4
2C0–21611–00–P2	D – 4
2C0–21629–00	D – 5
2C0–2162G–00	D – 5
4HM–21638–00	F – 15
2C0–21639–00	D – 4
51Y–21639–00	D – 4
	F – 4
2C0–2163A–00	D – 5
2C0–2163E–00	D – 5
2C0–2163F–00	F – 15
2C0–21640–00	D – 5
2C0–21649–00	D – 4
2C0–21650–00	D – 8
5JW–21668–00	D – 9
2C0–21669–00	D – 5
2C0–21710–00–P2	D – 7
3XV–21717–00	F – 6
2C0–2171A–00–P0	D – 15
2C0–2171A–00–P1	D – 15
2C0–2171A–00–P2	D – 15
5SL–2172E–00	D – 5
2C0–2172P–00	D – 7
5JX–21732–00	E – 2
2C0–21737–00	F – 9
2C0–2173E–00	D – 7
2C0–2173E–10	D – 7
2C0–2173F–00	D – 7
2C0–2173F–10	D – 7
2C0–2173P–00	D – 7
2C0–2173T–00	D – 5
2C0–21746–00	D – 2
2C0–21747–00	D – 7
2C0–2174X–00	D – 2
5PW–2174X–00	D – 7
2C0–2174Y–00	D – 2
5VY–2176V–00	E – 3
2C0–2177E–00–P0	D – 5
2C0–2177E–00–P1	D – 5
2C0–2177E–00–P2	D – 5
2C0–2177F–00	C – 3
2C0–2177J–00–P0	D – 6
2C0–2177J–00–P1	D – 6
2C0–2177J–00–P2	D – 6
2C0–21816–00	B – 9
2C0–21823–00	C – 7

CODIGO Nº	REF. Nº
26H–21828–00	B – 9
2C0–21871–00	B – 9
2C0–21875–00	B – 9
2C0–22110–00	D – 8
2C0–22128–00	D – 8
2C0–22141–00	D – 9
2C0–22151–00	D – 8
2C0–2217A–00	D – 8
2C0–2217M–00	D – 8
2C0–22184–00	D – 8
2C0–22210–00	D – 10
5SL–22219–00	D – 10
2C0–22241–00	D – 2
2C0–22250–00–P0	D – 5
2C0–22250–00–P1	D – 5
2C0–22250–00–P2	D – 5
2C0–22252–00	D – 9
2C0–22290–00–P0	D – 5
2C0–22290–00–P1	D – 6
2C0–22290–00–P2	D – 6
2C0–22311–00	D – 8
2C0–228A0–00	D – 8
2C0–228B0–00	D – 8
2C0–23102–00	D – 12
2C0–23102–10	D – 12
2C0–23103–00	D – 12
2C0–23103–10	D – 12
2C0–23106–00	D – 12
2C0–23106–10	D – 12
2C0–23110–00	D – 12
2C0–23111–00	D – 12
3VD–23115–00	D – 12
2C0–23120–00	D – 12
2C0–23141–00	D – 12
2C0–23143–00	D – 12
3VD–23144–00	D – 12
5VU–23145–00	D – 12
3VD–23156–00	D – 12
2C0–23170–00	D – 12
2C0–2331L–00	D – 12
5YU–2332N–00	D – 12
2C0–23340–00	D – 13
2C0–23377–00	G – 4
2C0–23389–00	D – 11
5YU–23393–00	D – 12
4XV–23415–01	D – 11
4XV–23418–00	D – 11
4XV–2341B–00	D – 11

CODIGO Nº	REF. Nº
4XV–23434–00	E – 9
2C0–23435–00	D – 11
3FV–23462–00	D – 13
2H9–23469–00	E – 9
2C0–23818–00	D – 11
2C0–24106–00	E – 2
2C0–24108–00	E – 2
5PW–2411J–01	E – 2
2C0–24135–00	D – 15
2C0–24136–10	C – 5
5SL–2413B–00	D – 14
2C0–2413Y–00	D – 14
2C0–24145–00	E – 2
2C0–2414H–00	E – 2
5EJ–2414H–00	E – 2
1LJ–2414J–00	F – 8
2C0–2414J–00	D – 15
5PW–2414J–00	E – 2
2C0–2414K–00	D – 15
2C0–2414N–00	D – 15
2C0–2414P–00	E – 2
2C0–2414R–00	E – 2
	F – 3
5PW–2415E–01	E – 2
4FM–24181–00	C – 3
5VY–24181–00	D – 14
2C0–24182–00	D – 2
5SL–24183–00	D – 14
5VY–24183–00	D – 14
2C0–24184–00	E – 2
5VY–24191–00	D – 14
5PW–24192–00	D – 15
5VY–24192–00	D – 14
2C0–24240–00	D – 14
2C0–24244–00	E – 2
2C0–24245–00	D – 14
2C0–24313–00	D – 15
2C0–24315–00	D – 15
2C0–24316–00	D – 15
2C0–24317–00	D – 15
68V–24376–00	B – 15
5JW–24486–00	D – 15
2C0–24491–00	D – 15
5JJ–24602–00	D – 14
2C0–24710–00	E – 3
2C0–24710–10	E – 3
2C0–24711–00	E – 3
2C0–24711–10	E – 3

CODIGO Nº	REF. Nº
2C0–24720–00	E – 3
2C0–24720–10	E – 3
5SL–24723–00	E – 3
2C0–24750–00	E – 3
2C0–24750–10	E – 3
2C0–24751–00	E – 3
2C0–24751–10	E – 3
2C0–2477A–00–P0	E – 3
2C0–2477A–00–P1	E – 3
2C0–2477A–00–P2	E – 3
2C0–24780–00	E – 3
2C0–2478E–00	E – 3
2C0–24792–00	E – 3
2C0–24825–00	E – 3
4XV–25117–00	E – 4
4XV–25118–00	E – 4
5SL–25168–00–0X	E – 4
5SL–25168–00–98	E – 4
5PW–25181–00	E – 4
4XV–25186–00	E – 4
5PW–25188–00	E – 4
4XV–25317–00	E – 6
5SL–25327–00	E – 6
5SL–25338–00–0X	E – 6
5SL–25338–00–98	E – 6
2C0–25364–00	E – 6
5SL–25366–00	E – 6
5SL–25367–00	E – 6
4XV–25376–00	E – 6
5SL–25376–00	E – 6
2C0–25379–00	E – 7
2C0–25381–00	E – 6
5SL–25383–00	E – 6
2C0–25388–00	E – 7
2C0–25389–00	E – 7
5MT–25398–00	E – 4
	E – 6
5MT–25398–10	E – 4
	E – 6
5MT–25398–20	E – 4
	E – 6
2C0–25445–20	E – 6
2C0–2580T–00	E – 5
2C0–2580T–10	E – 5
2C0–2580U–00	E – 5
2C0–2580U–10	E – 5
2C0–2580W–00	E – 8
2C0–2581T–00	E – 5

CODIGO Nº	REF. Nº
5SL–25827–00	E – 8
5SL–25827–10	E – 8
5SL–25828–00	E – 8
4ML–2582A–50	E – 15
5SL–2582W–00	E – 8
5SL–25838–00	E – 8
5VY–2583B–00	E – 5
2C0–2583V–00	E – 15
4PX–25852–00	E – 15
5VY–25852–00	E – 10
2VN–25854–00	E – 15
5VY–25854–00	E – 10
2VN–25855–00	E – 15
5VY–25855–00	E – 10
5VS–2585H–00	E – 10
2VN–25866–00	E – 15
5VS–25867–00	E – 10
5VS–2586F–00	E – 10
2C0–25872–00	E – 10
2C0–25874–00	E – 15
2C0–25886–00	E – 10
2C0–25887–00	E – 10
2C0–25894–00	E – 15
5SL–25894–20	E – 10
2C0–25895–00	E – 15
3FV–2589A–00	E – 15
2C0–2589E–00	E – 10
5VY–2589F–01	E – 10
5VY–2589G–00	E – 10
5VY–2589H–00	E – 10
5SL–25914–00	E – 8
5DH–25916–00	E – 8
3JD–25917–00	E – 8
5SL–25917–00	E – 8
4SV–25919–00	E – 5
5SL–25919–00	E – 8
2C0–25921–00	E – 8
4SV–25924–00	E – 5
8CR–25924–00	E – 8
3GM–25925–00	E – 5
5SL–25926–00	E – 8
5VY–25975–00	E – 10
2C0–26121–00	E – 9
2C0–26122–00	E – 9
2C0–26240–00	E – 9
2C0–26241–00	E – 9
5PW–26246–00	E – 9
2C0–26279–00	E – 11

CODIGO Nº	REF. Nº
2C0–26280–00	F – 4
5VY–26281–00	E – 9
2C0–26282–00	E – 9
2C0–26290–00	F – 4
2C0–26292–00	E – 10
2C0–26298–00	F – 4
2C0–26302–00	E – 9
5VS–26332–00	E – 10
2C0–26335–00	E – 9
2C0–27211–00	E – 15
4XV–27222–01	E – 15
2C0–27263–00	E – 12
2C0–27311–00	E – 12
2C0–27321–00	E – 12
2C0–27351–00	E – 12
2C0–27414–00	E – 12
2C0–27415–00	E – 12
2C0–2741L–00	E – 14
2C0–27420–00	E – 13
2C0–2742L–00	E – 14
5JJ–27431–00	E – 13
4BP–27434–01	C – 15
2C0–27435–00	E – 13
5JJ–27437–01	E – 14
5JJ–27441–00	E – 14
2C0–27442–00	E – 12
2C0–27443–00	E – 13
2C0–27445–00	E – 13
5GM–27445–00	D – 5
2C0–27446–00	E – 13
2C0–27451–00	E – 12
2C0–27453–00	E – 12
2C0–27491–00	E – 13
2C0–27961–00	G – 4
2C0–28100–00	D – 6
2C0–28110–00	D – 6
4FM–28135–00	D – 6
4XV–2814F–00	D – 6
2C0–28199–S0	D – 6
2C0–28217–00	F – 4
2C0–28218–00	F – 3
2C0–28219–00	F – 6
2C0–28227–00	F – 4
2C0–28228–00	F – 3
2C0–28229–00	F – 6
2C0–28237–00	F – 3
2C0–28238–00	F – 3
2C0–28268–00	F – 3

INDICE NUMERICO

CODIGO Nº	REF. Nº
2C0–28328–00	F – 5
2C0–2832P–00	F – 3
2C0–2833A–00	D – 3
2C0–2833E–00	D – 3
2C0–28342–00	F – 4
2C0–2834E–00	F – 9
2C0–2834F–00	F – 8
2C0–28356–00	F – 4
2C0–2835G–00–P0	F – 3
2C0–2835G–00–P1	F – 3
2C0–2835G–00–P2	F – 3
2C0–2835H–00–P0	F – 3
2C0–2835H–00–P1	F – 3
2C0–2835H–00–P2	F – 3
2C0–28365–00–P0	F – 4
2C0–28365–00–P1	F – 4
2C0–28365–00–P2	F – 4
2C0–2836A–00	B – 12
4KN–2836B–00	D – 7
2C0–2836E–00	B – 12
2C0–2836F–00	E – 12
2C0–2836G–00	D – 3
2C0–2836H–00	B – 9
2C0–2836K–00	F – 5
2C0–2836L–00	F – 8
2C0–2836M–00	F – 9
2C0–2836T–00	F – 6
2C0–2836U–00	F – 8
2C0–28371–00	F – 4
2C0–28372–00	F – 4
2C0–2837J–00	F – 6
2C0–2837K–00	F – 7
2C0–2837L–00	F – 4
2C0–2837M–00	F – 4
2C0–2838G–00	F – 8
2C0–2838J–00	F – 9
2C0–2838R–00	F – 4
2C0–2838T–00	F – 4
2C0–2838U–00	F – 8
2C0–28391–00	F – 6
2C0–28391–10	F – 6
2C0–28391–30	F – 6
2C0–28392–00	F – 7
2C0–28392–10	F – 7
2C0–28392–30	F – 7
2C0–28425–00	E – 12
2C0–28428–00	E – 12
2C0–28429–00	E – 12

CODIGO Nº	REF. Nº
2C0–28455–00	F – 3
2C0–2847N–00	F – 8
2C0–2847P–00	F – 9
2C0–2847R–00	F – 9
2C0–2847S–00	F – 6
2C0–2848H–00	F – 9
2C0–2848K–00	F – 9
2C0–81410–00	F – 10
2C0–81450–00	F – 10
2C0–81670–00	G – 3
2C0–81673–00	G – 3
4WP–81801–00	F – 11
2C0–81815–00	F – 11
4WP–81826–00	F – 11
4XV–8182A–00	F – 11
4WP–81844–00	F – 11
1FK–81847–00	F – 11
2C0–81890–00	F – 11
2C0–81940–00	G – 4
5EA–81950–20	G – 3
5JJ–81950–20	G – 3
5VK–81950–40	G – 3
5EA–81952–00	G – 3
5JJ–81952–00	G – 3
4XY–81960–00	G – 4
5VY–82100–00	G – 4
5SL–82113–00	G – 5
2C0–82116–00	G – 5
5SL–82119–10	G – 4
2C0–8212B–00	D – 4
133–82131–00	D – 4
36Y–82151–00	G – 4
5JJ–82151–00	G – 4
5JJ–82151–10	G – 4
5JW–82151–10	G – 4
5JJ–82151–30	G – 4
2C0–82160–00	D – 4
2C0–821A1–00	D – 4
2C0–821A2–00	D – 4
2C0–82309–00	G – 3
2C0–82310–00	G – 3
2C0–82318–00	B – 14
2C0–82380–00	B – 15
2C0–82380–10	G – 3
2C0–82386–00	B – 15
5SL–82511–08	G – 5
2C0–82530–00	G – 5
3GB–82540–01	G – 3

CODIGO Nº	REF. Nº
2C0–82541–00	G – 3
2C0–8255P–00	G – 5
5PX–82566–72	G – 4
5PS–82576–01	G – 4
2C0–8258J–00	D – 2
2C0–82590–00	G – 4
3MA–82591–00	E – 10
	G – 2
2C0–82910–00	G – 2
4XV–82917–01	G – 2
2C0–83310–00	F – 12
2C0–83311–00	F – 12
2C0–83318–00	F – 12
2C0–83320–00	F – 12
2C0–83330–00	F – 12
2C0–8333A–00	F – 12
2C0–83340–00	F – 12
2C0–8334A–00	F – 12
4GY–83350–00	G – 3
4TH–83371–00	G – 4
2C0–83500–00	F – 13
4XV–83513–00	F – 4
5PW–8352S–00	F – 13
5VY–8353E–00	F – 13
5VY–83572–00	F – 13
4WM–83755–01	G – 3
5EB–83912–02	G – 2
5JJ–83913–00	G – 2
5SL–83922–10	E – 10
2C0–83945–00	G – 2
2C0–83969–00	G – 2
2C0–83975–00	G – 2
4HM–83980–00	E – 10
2C0–84301–00	F – 14
2C0–84303–00	F – 14
4SV–84314–00	F – 14
2C0–84359–00	F – 14
5SL–84397–00	F – 14
2C0–84710–00	F – 15
4HC–84744–00	F – 15
5VX–84745–01	F – 15
5SL–84753–00	D – 7
	F – 15
3Y6–85130–02	D – 5
5VX–85720–01	G – 3
8CC–85790–01	G – 3
2C0–85820–00	C – 3
2C0–85885–00	B – 15

CODIGO Nº	REF. Nº
8FP–85886–00	F – 4
5VY–85896–00	G – 3
2C0–8591A–00	G – 5
2C0–8592A–00	C – 3
5VY–W0041–00	E – 10
5XT–W0042–60	E – 15
2C0–W0045–00	E – 5
5VX–W0046–00	E – 8
5PW–W0047–00	E – 5
5SL–W0047–00	E – 8
5PW–W0047–10	E – 5
1J3–W0048–00	E – 5
1UY–W0048–00	E – 8
5VY–W0048–00	E – 10
5PW–W0057–00	E – 5
5VY–W0057–00	E – 8
5PW–W0057–10	E – 5
5VY–W2470–00	E – 3
5SL–W2587–00	E – 10
2C0–W8250–00	G – 5
2C0–Y2171–00–P0	D – 7
2C0–Y2171–10–P1	D – 7
2C0–Y2410–00–01	D – 14
2C0–Y2410–00–02	D – 14
2C0–Y2808–00–P1	F – 8
2C0–Y2808–00–P3	F – 8
2C0–Y2808–10–P2	F – 8
2C0–Y2809–00–P1	F – 9
2C0–Y2809–00–P3	F – 9
2C0–Y2809–10–P2	F – 9
2C0–Y283U–00–P0	F – 6
2C0–Y283U–10–P1	F – 6
2C0–Y283U–20–P2	F – 6
2C0–Y283V–00–P0	F – 6
2C0–Y283V–10–P1	F – 6
2C0–Y283V–20–P2	F – 6
2C0–Y2881–00	F – 3
2C0–YK241–00–P0	D – 14
90101–08662	E – 12
90105–05002	D – 15
90105–06020	D – 3
	E – 12
90105–06027	B – 2
90105–06040	B – 8
90105–06082	B – 7
90105–06083	F – 11
90105–07004	B – 6
90105–08054	C – 4

CODIGO Nº	REF. Nº
90105–08063	C – 3
90105–08113	G – 3
90105–083A2	C – 4
	D – 2
90105–10017	D – 10
90105–12228	D – 2
90105–126A8	F – 10
90105–14002	E – 4
90109–05006	B – 14
90109–06014	C – 7
90109–06015	B – 12
	C – 5
	C – 7
90109–06031	C – 7
90109–06078	F – 7
90109–06100	C – 5
90109–06171	D – 4
90109–06182	D – 5
90109–066F0	B – 2
	E – 13
90109–080G5	G – 5
90109–085G6	E – 13
90109–10017	D – 9
90109–103A9	E – 13
90109–12010	D – 8
90109–12011	D – 9
90110–05014	D – 15
	E – 11
90110–05018	E – 9
90110–05112	D – 14
90110–06060	C – 7
90110–06094	B – 2
90110–06102	D – 8
90110–06106	B – 6
90110–06122	G – 4
90110–06140	B – 7
90110–06156	C – 7
90110–06161	B – 11
	C – 5
90110–06168	B – 13
	G – 3
90110–06175	B – 2
	G – 3
90110–06182	C – 13
90110–06258	E – 3
90110–08220	E – 14
90111–05003	D – 7
	F – 6

CODIGO Nº	REF. Nº
90111–05021	F – 4
90111–05026	E – 10
	F – 2
90111–06010	C – 3
90111–06019	C – 14
90111–06030	D – 4
90111–06038	D – 9
	D – 11
	D – 14
	F – 4
90111–06040	F – 6
90111–06041	E – 11
90111–06043	D – 4
90111–06051	E – 3
90111–06063	F – 7
90111–06071	C – 3
90111–08025	E – 12
90116–10025	C – 5
90116–10026	C – 5
90116–10485	E – 6
90119–06138	D – 5
90119–08083	C – 5
90119–08084	C – 5
90149–05012	B – 13
90149–06043	E – 5
90149–06080	F – 10
90149–06082	C – 5
	F – 10
90149–06233	E – 13
90149–06298	G – 4
90149–08009	E – 8
90149–10017	D – 2
90150–05024	F – 3
90151–06024	C – 11
90154–05012	D – 15
90159–05015	E – 2
90159–06024	C – 9
90160–05006	F – 5
	F – 14
90164–05014	F – 8
90170–08358	C – 14
90170–28419	D – 11
90176–06055	F – 5
90176–10075	B – 2
90179–05523	D – 15
	F – 3
90179–07001	B – 3
90179–08410	C – 3

INDICE NUMERICO

CODIGO Nº	REF. Nº
90179–10006	B – 2
90179–12248	D – 2
90179–20011	C – 12
90179–30691	D – 11
90183–04039	D – 4
90183–05042	F – 3
90183–05061	F – 15
90183–05074	D – 15
90183–05076	D – 3
	D – 7
	F – 3
	F – 7
90183–050A0	E – 10
90183–05M02	F – 6
90183–06069	B – 9
90185–05009	E – 12
90185–10009	E – 6
90185–12119	D – 8
90185–22002	D – 9
90185–24007	E – 6
90201–042E0	G – 4
90201–047A2	F – 14
90201–06063	D – 14
90201–06071	B – 8
90201–06380	E – 13
90201–06M30	D – 15
90201–06M31	C – 3
90201–08050	E – 12
90201–08054	G – 3
90201–082A9	B – 14
90201–08326	C – 15
90201–08452	E – 9
90201–087G2	C – 3
90201–10013	B – 2
90201–10021	E – 6
90201–10029	C – 10
90201–10035	E – 12
90201–10118	E – 11
	E – 15
90201–113K2	B – 11
90201–12008	F – 10
90201–12013	C – 14
90201–12575	C – 14
90201–12790	G – 3
90201–127E1	C – 14
90201–146F9	E – 12
90201–177G4	C – 14
90201–20023	C – 12

CODIGO Nº	REF. Nº
90201–20278	C – 12
90201–22014	D – 9
90201–25020	E – 7
90201–281U8	D – 11
90201–33014	D – 9
90202–05180	D – 7
	F – 6
90202–30235	D – 11
90206–12074	C – 14
90208–25002	C – 9
90209–21332	C – 11
90209–21351	C – 11
90209–22352	C – 11
90209–25011	C – 11
90214–13002	E – 13
90214–25003	C – 11
90214–25004	C – 11
90240–08084	E – 13
90269–06001	D – 6
	D – 7
	F – 15
90269–06008	E – 13
	F – 3
	F – 7
90269–06081	D – 11
	F – 9
90269–06083	B – 10
90269–07007	B – 8
	D – 8
	F – 6
90269–07008	D – 8
90269–07010	D – 2
	D – 4
90269–07076	D – 7
90338–06018	D – 4
90338–12192	F – 5
90338–15004	D – 2
90340–14132	B – 12
90340–18002	B – 2
90340–32004	C – 7
90387–05024	E – 11
90387–05025	E – 12
90387–05028	E – 15
90387–05030	F – 13
90387–06022	D – 9
90387–06023	E – 13
90387–0602R	F – 5
90387–06048	D – 3

CODIGO Nº	REF. Nº
90387–06055	D – 14
90387–06057	D – 4
	E – 10
	F – 6
90387–0611K	D – 11
90387–06143	D – 14
90387–0614M	B – 8
90387–062X0	D – 8
90387–063E6	C – 3
90387–065J6	D – 15
90387–06681	B – 9
90387–06697	E – 14
90387–066Y6	D – 14
90387–067K8	F – 7
90387–07391	B – 8
90387–08021	C – 3
90387–1012B	D – 9
90387–126Y1	D – 8
90387–127W0	D – 8
90387–21003	C – 11
90387–21004	C – 12
90387–25015	C – 11
90387–25016	C – 11
90387–250R3	C – 11
90387–28011	C – 11
90401–10012	E – 5
90401–10172	E – 11
	E – 15
90401–20145	B – 12
90430–06014	B – 7
90430–08119	B – 2
90430–08143	C – 7
90430–09002	B – 13
90430–10148	G – 3
90445–19002	E – 12
90446–15386	E – 15
90450–22017	B – 9
90450–32001	B – 7
90450–35001	B – 7
	B – 8
90450–38002	B – 7
90450–56007	B – 13
90464–09M31	D – 15
90464–10M38	B – 9
90464–12036	G – 4
90464–12089	D – 4
90464–13004	D – 5
90464–13007	F – 4

CODIGO Nº	REF. Nº
90464–13007	F – 8
90464–13073	D – 5
90464–14228	D – 5
90464–15157	E – 9
90464–15195	E – 9
90464–16011	D – 8
90464–16012	D – 8
90464–16061	G – 4
90464–28003	G – 3
90464–32060	G – 4
90464–44002	D – 4
90464–47001	F – 14
90465–08395	C – 7
90465–10040	B – 12
90465–15011	G – 4
90467–08003	B – 9
90467–09006	D – 15
90467–10M04	B – 9
90467–11090	B – 7
90467–12085	E – 15
90467–120A3	E – 10
90467–14015	B – 14
90467–15001	B – 13
90467–17128	B – 13
90467–180A0	B – 14
	C – 2
90467–18172	C – 2
90467–200A0	B – 7
	B – 9
90467–29174	B – 8
90467–310A0	B – 9
90468–16001	E – 3
90480–01020	B – 14
90480–08264	B – 13
90480–10003	D – 3
90480–10542	D – 14
90480–11005	B – 8
90480–11006	E – 12
90480–12314	D – 15
90480–12607	E – 13
90480–12613	F – 7
90480–14003	D – 4
	F – 6
90480–14005	C – 3
90480–15363	B – 8
90501–080A2	C – 13
90501–12743	E – 14
90501–220A2	C – 9

CODIGO Nº	REF. Nº
90506–18008	E – 12
90506–20193	E – 15
90508–16052	C – 10
90508–18134	E – 12
90508–32020	C – 14
91312–06016	B – 13
	G – 3
91312–06020	B – 8
91312–06025	B – 11
91314–06025	D – 15
91314–06030	C – 3
91314–06035	E – 14
91314–08030	D – 11
	D – 13
	E – 9
91314–08035	C – 3
91314–08040	D – 12
91317–04025	G – 4
91317–05010	D – 15
91317–06016	D – 14
91317–06025	E – 9
91317–06035	B – 8
91317–06090	D – 14
91380–06012	G – 5
91402–16012	E – 15
91402–25015	E – 13
91492–12010	B – 15
91702–06018	E – 15
91808–16023	B – 2
91808–17032	B – 11
92012–06020	B – 13
92014–08014	C – 7
92017–05025	G – 4
92017–06016	D – 5
	D – 8
	E – 13
92017–06025	F – 2
	G – 4
92907–06200	E – 15
92907–08600	C – 10
92907–12600	D – 8
93101–10090	B – 7
93101–12004	C – 14
93102–15212	C – 9
93102–35017	C – 12
93106–28043	E – 4
93106–40013	E – 6
93109–17071	D – 8

CODIGO Nº	REF. Nº
93210–04092	C – 5
93210–06667	B – 11
93210–09165	B – 11
	C – 6
93210–14003	B – 11
93210–14579	C – 5
93210–15566	B – 12
93210–15620	E – 15
93210–16325	C – 5
93210–27194	C – 7
93210–32172	C – 7
93210–33133	B – 7
93210–41N50	D – 12
93210–46001	B – 7
93305–20509	C – 11
93306–00006	B – 7
93306–00106	C – 9
	C – 13
93306–07208	E – 4
93306–20464	C – 11
93306–20531	E – 6
93306–20562	C – 11
93310–340N8	C – 9
93315–21570	C – 9
93315–31758	D – 8
93315–31759	D – 8
93317–11096	C – 9
93317–11295	C – 14
93317–330A0	D – 8
93317–330A1	D – 8
93317–43580	E – 6
93399–99932	D – 11
93399–99957	D – 13
93420–61M07	E – 6
93440–25186	C – 11
93440–28184	C – 11
93440–52014	C – 12
93450–16153	B – 3
93501–04011	E – 14
93603–09106	B – 11
93603–17070	B – 11
93607–44190	B – 6
93608–17263	C – 7
93900–00030	E – 4
	E – 6
94112–17083	E – 4
94118–17062	E – 6
94580–25074	B – 11

INDICE NUMERICO

CODIGO Nº	REF. Nº
94582–21114	E – 7
94591–61118	B – 6
94682–21031	E – 7
94701–00402	B – 2
95022–06008	G – 4
95022–06016	G – 3
95022–08012	B – 2
95024–06012	E – 13
95024–06025	B – 7
95024–10040	D – 2
95024–10045	D – 2
95027–06012	C – 3
95027–06020	G – 2
95027–06025	C – 3
95027–06030	D – 14
95027–10020	B – 9
95304–06700	C – 14
95307–04700	B – 15
95307–08700	E – 15
95602–10200	E – 12
95604–06200	E – 14
95604–08200	E – 7
95607–05200	D – 5
	G – 4
95607–06200	G – 2
95607–10200	D – 9
	D – 10
95607–14200	D – 10
95612–08625	B – 2
95707–06500	D – 4
95807–06014	B – 9
95807–06020	D – 3
95807–06035	B – 8
95812–06030	B – 11
95812–06045	C – 5
95812–06055	C – 5
95812–06065	C – 5
95812–06080	B – 11
95812–08065	C – 5
95817–06020	E – 11
95822–06020	C – 14
95827–06012	B – 9
97702–40010	F – 12
97706–04012	F – 15
97707–40016	F – 4
	F – 14
97707–50016	F – 5
	F – 13

CODIGO Nº	REF. Nº
97707–50016	F – 14
97707–50116	F – 4
98507–04010	G – 2
98507–05012	B – 15
98507–05022	G – 2
98507–05035	G – 2
98507–06012	B – 15
98707–03016	G – 2
98902–05025	B – 14
98907–05012	F – 15
98907–05014	E – 2
99001–07600	C – 10
99001–10600	C – 14
99009–10400	B – 7
	C – 10
99009–17400	C – 14
99241–00240	F – 8
99247–00240	F – 8
99530–08012	C – 7
99530–10014	C – 5
99530–10114	B – 2